DRAFT ENVIRONMENTAL IMPACT ASSESSMENT (EIA) REPORT

for

WIDENING OF BARAIYERHAT–HEAKO–RAMGARH ROAD PROJECT
(R-151 and R-152)

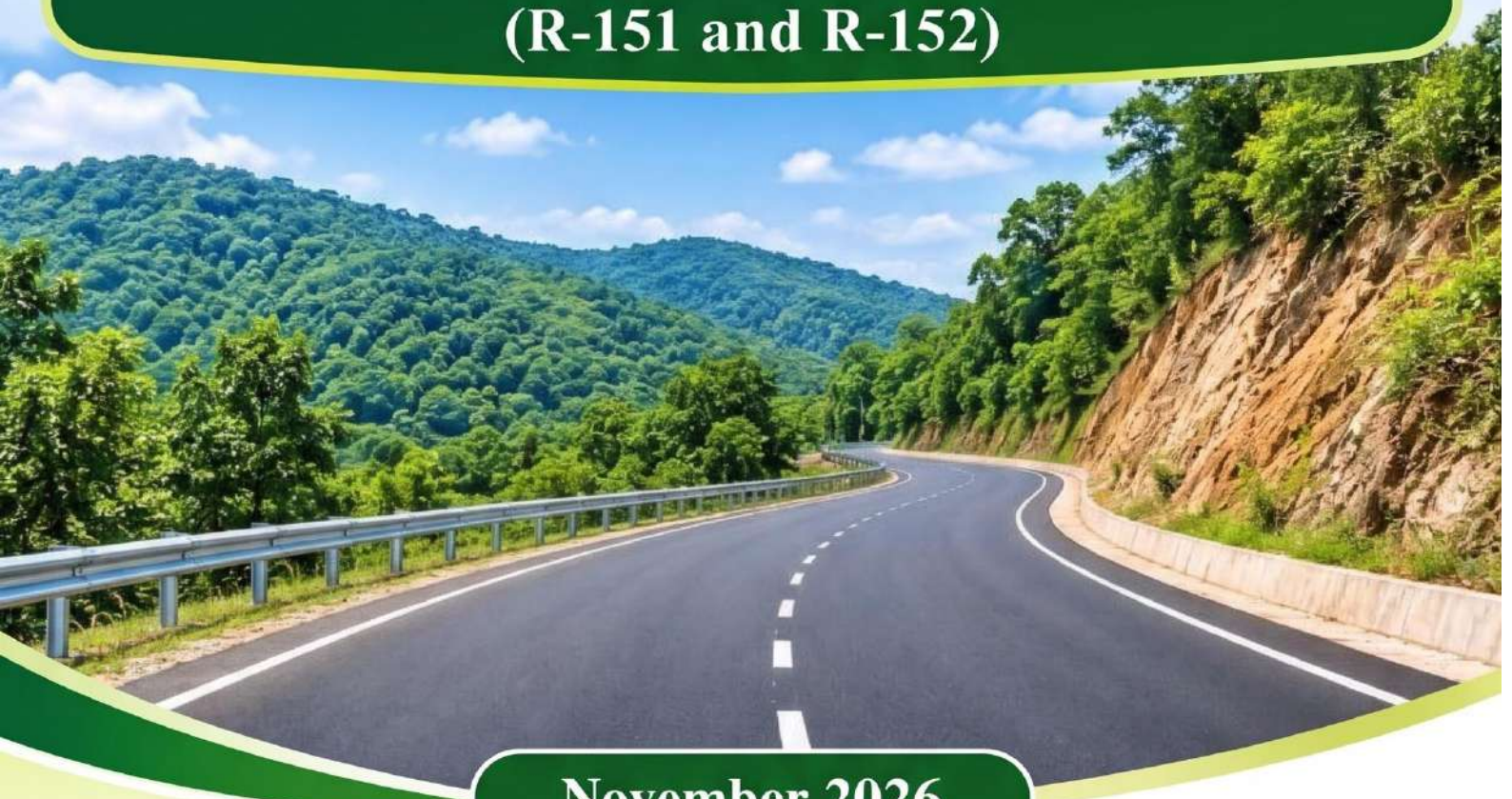

November 2026

Submitted by

Roads and Highways Department (RHD)

Chattogram Road Circle, Chattogram

Prepared by:

Imam and Associates

TABLE OF CONTENTS

List of Tables vii
List of figures x
Abbreviations xi
Executive Summary xiv
Chapter 1 Introduction 1
1.1 Background 1
1.2 Project Objective 2
1.3 Scopes of EIA 2
1.4 Objective of EIA 3
1.5 Methodology 3
1.6 Limitations 4
1.7 EIA Study Team 4
1.8 Contents of the Report 5
Chapter 2 Legislative, Reputation and Policy Consideration 7
2.1 Policy, Legal and Administrative Framework 7
2.1.1 Relevant Regulations of GoB 7
2.1.2 Applicability of the Legal Framework in the Project 14
Chapter 3 Description of the Project 15
3.1 Introduction 15
3.1.1 Category 15
3.1.2 Need for the Project 15
3.2 Location of the Project 16
3.3 Various Components of the Project 17
3.3.1 Construction of Road 17
3.3.2 Construction of Bridge Span and Viaduct Spans 17
3.3.3 Construction of Embankments 21
3.3.4 Construction of Pavement 21
3.3.5 Present Traffic 25
3.3.6 Implementation Cost 25

3.3.7 Location of the Project 25
3.4 Materials Used and Sources for Construction 26
3.4.1 Concrete Aggregate 26
3.4.2 Cement and Steel Reinforcement 26
3.4.3 Bitumen 26
3.4.4 Recycled Pavement Materials 26
3.5 Project Implementation Schedule 26
Chapter 4 Baseline Environment Assessment 27
4.1 Introduction 27
4.2 Physical Environment 27
4.2.1 Topography 27
4.2.2 Description of River System 28
4.3 Physio-Chemical Environment 28
4.3.1 Climate 28
4.3.2 Air Quality 30
4.3.3 Surface Water Quality 33
4.3.4 Ground Water Quality 35
4.3.5 Ambient Noise Level 37
4.4 Geology and Seismicity 41
4.4.1 Soil Characteristics 41
4.4.2 Seismicity 43
4.5 Natural Disasters 46
4.5.1 Floods 46
4.5.2 Cyclone and Storm Surge 47
4.6 Ecological Environment 48
4.6.1 Terrestrial Flora 49
4.6.2 Terrestrial Fauna 49
4.7 Aquatic Ecosystem in the Project Site 50
4.7.1 Aquatic Flora 50
4.7.2 Aquatic Fauna 51
4.7.3 Fisheries 51

4.8 Ecologically Critical Area, Protected Area, National Park etc. 52
4.8.1 Ecologically Critical Area (ECA) 52
4.8.2 Protected Area (PA) 52
4.8.3 National Park (NP) 53
4.8.4 Game Reserve (GR) 53
4.8.5 Wildlife Sanctuaries (WS) 53
4.9 Assessment of Social Baseline 54
4.9.1 Assessment of Social Baseline 54
4.9.2 Demographic Profile 54
4.9.3 Assessment of Infrastructure Facilities 62
4.9.4 Distribution of Household Heads 62
Chapter 5 Anticipated impacts and mitigation measures 64
5.1 Introduction 64
5.2 Project Corridor 64
5.2.1 Project Right of Way (RoW) 64
5.2.2 Corridor of Impact (CoI) 65
5.3 Anticipated Adverse Impacts and Mitigation Measures 65
5.3.1 Design/Pre-Construction Stage 65
a) Climate 65
b) Landscape/Topography 65
a) Hill Cutting 66
c) Land Acquisition and Resettlement 67
d) Loss of Agricultural Production 68
e) Removal of Commercial Infrastructure 68
f) Removal of Physical, Cultural and Other Community structures 68
g) Damage to Public Utilities 70
h) Tree Cutting and Wildlife 70
i) Change of Local Hydrology/Drainage Congestion 71
j) Water Bodies and Fisheries 72
5.3.2 Construction Stage 72
b) Landscape/Topography 72

c) Loss Top Soil 72
d) Hill Cutting 73
e) Dredging and Dredged Materials 75
f) Soil Erosion and Siltation 75
g) Soil Contamination 76
h) Air Pollution and Dust 76
i) Noise and Pollution 77
j) Surface Water Quality 77
k) Groundwater Quality 78
l) Drainage Congestion 79
m) Clearing of Vegetation 79
n) Terrestrial Fauna 81
o) Aquatic Species 81
p) Fisheries 81
q) Loss of Agricultural Production 82
r) Pollution from Wastes 83
s) Asphalt Hot Mix Plant, Rock Crushing and Bitumen Supply 83
t) Construction Waste Disposal 84
u) Construction Yard 84
v) Labor Impact 85
w) Occupational Health and Safety (OHS) 85
x) Community Health and Safety 86
y) Traffic Congestion/Road Accidents 87
z) Income/Employment 87
aa) Tree Plantation 88
5.3.3 Specific Impacts due to Bridge Construction 88
b) Soil Erosion and Siltation 89
c) Disruption of Water Transport and Navigation 89
d) Water and Soil Quality 91
e) Noise and Vibration 91
f) River Ecology 91

5.3.4 Operation Stage 92
a) Air Quality 92
b) Noise and Vibration 92
c) Water Pollution (Surface and Groundwater) 93
d) Road Accident/Road Safety 93
e) Split of Community 94
f) Income/Job Opportunity 94
g) Earth Sliding 94
Chapter 6 Analysis of alternatives 96
6.1 Introduction 96
6.1.1 "No-action" Alternatives 96
6.2 The Alternative Alignments 97
Chapter 7 Stakeholder and public consultation 98
7.1 Introduction 98
7.2 Stakeholder Identification and Analysis 98
7.3 Information Disclosure and Consultation 98
7.3.1 Focus Group Discussion 99
7.3.2 Stakeholder Consultation Meeting 101
7.4 Summary of FGD and Stakeholder Consultation Meeting for EIA 101
7.5 Key Informant Interviews (KII) 103
7.6 Summary of FGD and Stakeholder Consultation Meeting for EIA 105
Chapter 8 Environmental Management and mitigation plan 107
8.1 General 107
8.2 Objectives of the Environmental Management Plan 107
8.3 Environmental Management Plan 107
8.4 Environmental and Social Monitoring Plan 130
8.4.1 Objectives 130
8.5 Institutional Arrangements 139
8.6 Implementation Arrangements 139
8.7 Institutional Responsibilities 132
8.7.1 Ministry of Road and Transport and Bridges (MoRTB) 132

8.7.2 Inter-ministerial Steering Committee 132
8.7.3 Roads and Highways Department 132
8.7.4 The Social and Environmental Circle 132
8.7.5 Project Implementation Unit 132
8.7.6 Construction Supervision Consultant 133
8.7.7 Contractor 133
8.8 Environmental Monitoring Cost Estimation 133
8.9 Project Benefits 135
Chapter 9 Grievance redress mechanism 137
9.1 Introduction 137
9.2 Objectives 137
9.3 Details of Mechanism 138
9.3.1 Formation and Operation of the GRC 138
9.3.2 Steps to a Solution 139
9.3.3 Construction Workers Grievance 140
Chapter 10 Emergency Response Plan & Disaster Impact Assessment 141
10.1 Emergency Response 141
10.2 Disaster Management 142
10.2.1 Preventive Action 142
10.2.2 Reporting Procedures 143
10.2.3 Communication System 143
10.2.4 Emergency Action Committee 143
10.2.5 Emergency Measures 144
10.2.6 Emergency Lighting 144
10.2.7 Fire Protection 144
10.2.8 Environmental, Health and Safety (EHS) 144
Chapter 11 Conclusion and recommendation 147
11.1 Conclusion 147
11.2 Recommendations 147
Annexure 149
Annex-1: Approved ToR 149

Annex-2: Present Condition of the Project Area 152
Annex-3: FGD Attendance Sheet 155
Annex-4: Ambient Air Quality Monitoring Report 162
Annex-5: Ambient Noise Level Test Report 189
Annex-6: Surface Water Quality Test Report 192
Annex-7: Pictures of Surface Water Sample Collection Points 197
Annex-8: Groundwater Quality Test Report 199
Annex-9: Pictures of Ground Water Sample Collection Points 205
Annex-10: NoC from Forest Department 206
Annex-11: NoC from Union Parishad 208
Annex-12: Assessment Report of Hill Cutting from DoE 210
Annec-13: Assessment Report from DoF 220
Annex-14: Land use Permission from Forest Department 223

LIST OF TABLES

Table 2-1: Summary of E & S Regulations of GOB 7
Table 3-1: Present traffic data of the project area 25
Table 4-1: Monthly Averages of Climate Variables of the Project Area 29
Table 4-2: Monitoring Stations (Ongoing Pre-Construction Phase) 31
Table 4-3: Monitoring Stations (During Ongoing Construction Phase) 31
Table 4-4: Ambient Air Quality Analysis Result 31
Table 4-5: Surface Water Sample Collection Points (Pre-Construction Phase) 33
Table 4-6: Surface Water Sample Collection Points (During Ongoing Construction Phase) 33
Table 4-7: Surface Water Quality Analysis Result 33
Table 4-8: Ground Water Sample Collection Points (Pre-Construction Phase) 35
Table 4-9: Ground Water Sample Collection Points (During Ongoing Construction Phase) 35
Table 4-10: Ground Water Quality Analysis Result 35

Table 4-11: Monitoring Stations....38
Table 4-12: Noise Level Monitoring Data 39
Table 4-13: Description of Seismic Zones [BNBC (2017)] 46
Table 4-14: List of Trees in the Area 49
Table 4-15: List of Reptiles....50
Table 4-16: List of Fishes....51
Table 4-17: Population by sex in the study upazilas, 2022 54
Table 4-18: Household, household size and sex ratio in the study upazilas, 2022 54
Table 4-19: Population by religion in the study upazilas, 2022 55
Table 4-20: Ethnic population by sex in the study upazilas, 2022 55
Table 4-21: Literacy rate by sex and age group in the study upazilas, 2022 (%)....56
Table 4-22: Estimated literate population aged 7 years and above in the study upazilas, 2022 56
Table 4-23: Households by type of household and dwelling in the study upazilas, 2022....57
Table 4-24: General households by ownership status (tenancy) of dwelling in the study upazilas, 2022 57
Table 4-25: General households by main source of drinking water in the study upazilas, 2022 58
Table 4-26: General households by main source of electricity in the study upazilas, 2022 59
Table 4-27: General households by toilet facilities in the study upazilas, 2022 59
Table 4-28: General households by type of toilet use (shared/not shared) in the study upazilas, 2022 60
Table 4-29: Population aged 5 years and above by working status in the study upazilas, 2022 60
Table 4-30: Employed population aged 5 years and above by sex in the study upazilas, 2022 61
Table 4-31: Employed population aged 5 years and above by field (sector) of employment in the study upazilas, 2022....61
Table 4-32: General households by structure of main dwelling (housing condition) in the study upazilas, 2022 62
Table 4-33: Head of general household by sex in the study upazilas, 2022....63
Table 5-1: List of the affected trees....70
Table 7-1: List of the FGD meetings 99

Table 7-2: Details about the consultation meetings..... 101

Table 7-3: List of the Key Informants..... 104

Table 8-1: Environmental Management Plan-Mitigative Measures..... 109

Table 8-2: Environmental and Social Management Plan- Monitoring Actions 132

Table 8-3: Environmental Safeguard Cost 133

LIST OF FIGURES

Figure 3-1: Project location in Bangladesh 16
Figure 3-2: Proposed Road (for improvement) alignments from Baraiyerhat - Heako - Ramgarh Road on satellite map (R151 & R152) 17
Figure 3-3: General and plan view of proposed bridge 18
Figure 3-4: Deck slab of proposed bridge 19
Figure 3-5: Elevation of Abutment 20
Figure 3-6: Parapet of the proposed bridge 20
Figure 3-7: Details Cast-In-Situ Pile for abutment 20
Figure 3-8: Plan view of proposed culvert 21
Figure 3-9: Pavement design for strengthening and widening 22
Figure 3-10: Pavement design for raising 22
Figure 3-11: Rigid pavement design for the proposed road 24
Figure 4-1: Roadside View of Baraiyarghat to Ramgarh Road 27
Figure 4-2: Feni and Hinguli river 28
Figure 4-3: Air Sample Monitoring Locations 31
Figure 4-4: Noise Level Monitoring Station 38
Figure 4-5: General Soil Type Map of Bangladesh 42
Figure 4-6: Geological Map of Bangladesh 43
Figure 4-7: Tectonic Map of Bangladesh 44
Figure 4-8: Seismic Zoning Map of Bangladesh (BNBC 2017) 45
Figure 4-9: Flood Prone Areas of Bangladesh 47
Figure 4-10: Cyclone and Storm Surge Areas of Bangladesh 48
Figure 4-11: Shal Forest in Ramgarh 53
Figure 4-12: Cutout of Forest Due to Construction 53
Figure 7-1: FGD with different local stakeholders at different affected area. 101
Figure 7-2: Community consultation Meeting 103
Figure 7-3: Key Informant Interview (KII) of the project area 105
Figure 9-1: Grievance Redress Mechanism of the Project 140

ABBREVIATIONS

AADT	Annual Average Daily Traffic
AQ	Air Quality Station
ASTM	American Society for Testing and Materials
BFD	Bangladesh Forest Department
BIWTA	Bangladesh Inland Water Transport Authority
BMD	Bangladesh Meteorological Department
BOD	Biochemical Oxygen Demand
BOQ	Bill of Quantity
BRTA	Bangladesh Road Transport Authority
BTCL	Bangladesh Telecommunications Company Limited
BWDB	Bangladesh Water Development Board
CESMP	Construction Environmental and Social Management Plan
COD	Chemical Oxygen Demand
CoI	Corridor of Impact
CRO	Chief Resettlement Officer
CROW	Construction Right of Way
CSC	Construction Supervision Consultants
DC	Design Consultants
DG	Diesel Generating
DMMP	Dredged Materials Management Plan
DoE	Department of Environment
EA	Executing Agency
ECA	Ecologically Critical Area
ECR	Environment Conservation Rules
EHSO	Environment, Health and Safety Officer
EIA	Environmental Impact Assessment
EMP	Environmental Management Plan
EN	European Standards
EQS	Environmental Quality Standards

ERP	Emergency Response Plan
ESMoP	Environmental & Social Monitoring plan
ESMP	Environmental and Social Management Plan
ESO	Environmental and Safety Officers
ESS	Environment and Social Standards
ETP	Effluent Treatment Plan
EU	Environmental Unit
FC	Fecal Coliform
FD	Forest Department
FGD	Focused Group Discussions
GDP	Gross Domestic Product
GIS	Geographical Information System
GOB	Government of the People's Republic of Bangladesh
GOI	Government of the Republic of India
GPS	Global Positioning System
GR	Game Reserve
GRC	Grievance Redress Committee
GSM	Global System for Mobile Communication
HFL	High Flood Level
HHs	Households
IFC	International Finance Corporation
KII	Key Informant Interview
LARFP	Land Acquisition and Resettlement Planning Framework
LARP	Land Acquisition and Resettlement Plan
LOC	Line of Credit
MCE	Maximum Considered Earthquake
MoEF	Ministry of Environment & Forests
MoRTB	Ministry of Road Transport and Bridges
MS	Method Statement
MSDS	Material Safety Data Sheet

NEMAP	National Environmental Management Action Plan
NGO	Non-governmental Organizations
NLTP	National Land Transport Policy
NP	National Park
NPDM	National Plan for Disaster Management
NQ	Noise Quality Station
OHS	Occupational Health and Safety
PA	Protected Area
PAP	Project Affected People
PDB	Power Development Board
PIC	Project Implementation Committee
PIU	Project Implementation Unit
PM	Particulate Matters
PPE	Personal Protective Equipment
RHD	Roads and Highway Department
ROW	Right of Way
RP	Resettlement Plan
RSEC	Social and Environmental Circle
SFYP	Seventh Fifth Year Plan
SIA	Social Impact Assessment
SPM	Suspended Particulate Matter
TC	Total Coliform
UP	Union Parishad
WB	World Bank
WMP	Waste Management Plan
WS	Wildlife Sanctuary

EXECUTIVE SUMMARY

Introduction

Bangladesh is upgrading its road network to accommodate modern and diversified vehicles and strengthen regional and international transport connectivity. In this context, the Government of Bangladesh has undertaken the Widening of Baraiyarhat–Heyako–Ramgarh Road Project to facilitate bilateral trade and improve connectivity between Bangladesh and India. The project involves the improvement and widening of approximately 38.0 km of road, extending from Baraiyarhat (Chainage 0+000), connected to the Dhaka–Chattogram National Highway, to Ramgarh Bazar. It comprises two sections: the 20.0 km Baraiyarhat–Heyako–Fatikchhari Road (R-151) and the 18.0 km Heyako–Ramgarh Road (R-152). Approximately 34.750 km of the corridor falls within Mirsharai and Fatikchhari Upazilas of Chattogram District, while the remaining 3.250 km lies within Ramgarh Upazila of Khagrachhari Hill District. The existing carriageway width of approximately 5.5 m is being upgraded to 11.3 m. The project corridor is located approximately 72 km from Chattogram City and 201 km from Dhaka. The project is jointly financed by the Government of Bangladesh (GoB) and the Third Indian Line of Credit (LoC-III), with a total estimated cost of BDT 122,631.63 lakh, comprising BDT 63,224.80 lakh from GoB and BDT 59,406.83 lakh from LoC-III.

The project is expected to strengthen road connectivity between Chattogram Port and Ramgarh Land Port, facilitating two-way trade between Bangladesh and India through the Sabroom–Ramgarh land port route. It is also anticipated to enhance regional trade, export-import activities, tourism, and access to markets and services. Improved road connectivity is expected to generate employment opportunities, particularly for local youth and women, contribute to poverty reduction, and promote the overall socioeconomic development of the project area.

Under the Environment Conservation Rules (ECR), 2023, the construction, reconstruction, or expansion of regional, national, and international roads falls under the Red Category, requiring a comprehensive Environmental Impact Assessment (EIA). The EIA findings indicate that the anticipated environmental risks and impacts are predominantly construction-related, reversible, and largely confined to the project footprint. These impacts can be effectively managed through established engineering practices and appropriate environmental mitigation and management measures.

Purpose and Scope of EIA

The objective of this Environmental Impact Assessment (EIA) is to assess the potential environmental and social risks and impacts associated with the upgradation of the Baraiyerhat–Heako–Ramgarh Road from a two-lane to a four-lane road and to develop appropriate mitigation measures following the mitigation hierarchy. The assessment identifies potential impacts during the pre-construction, construction, operation, and maintenance phases and recommends measures to avoid, minimize, mitigate, and manage adverse impacts while promoting environmental and social sustainability.

The EIA identifies potential adverse impacts, including land loss, vegetation clearance, loss of local tree species, surface water quality deterioration, and construction-related safety risks. However, the overall assessment indicates that these impacts are manageable and can be minimized through the implementation of the proposed Environmental and Social Management Plan (ESMP). Therefore, the project is considered environmentally and socially feasible, subject to the effective implementation of the recommended mitigation and monitoring measures.

Methodology

Prior to field investigations, satellite imagery and GIS analysis were undertaken to identify existing site conditions, boundaries, and environmental and social constraints. Reconnaissance surveys and field investigations were conducted to assess the physical, biological, and socioeconomic baseline conditions, biodiversity, and conservation significance of the study area. Primary data were collected through environmental quality assessments, including air, noise, surface water, groundwater, soil, riverbed sediment, benthos, and plankton sampling. Stakeholder consultations, including FGDs, KIIs, public consultations, and informal interviews, were conducted with local communities, businesses, social representatives, Upazila officials, and relevant agencies to identify stakeholder concerns and priorities. Secondary information was obtained from relevant reports, journals, and satellite imagery. Based on the findings, potential environmental and social impacts of the proposed road widening project were assessed, and appropriate mitigation measures, an Environmental and Social Monitoring Plan (EMoP), and environmental safeguard costs were prepared.

Legal Framework

The proposed road widening project will be implemented in compliance with applicable environmental and social laws and regulations of the Government of Bangladesh (GoB). Relevant environmental, health, safety and social regulations, policies, framework and standards of GoB have been reviewed and compared which was the basis of risk categorization of the project and assessment and management of environmental and social risk. It provides a description of the regulatory framework applicable to the proposed project.

For this project National Environmental Policy (1992), National Environmental Management Action Plan (1995), National Land Use Policy (2001), National Fisheries Policy (1998), Environment Conservation Act (1995, 1997) and subsequent amendments until 2010, Environment Court Act (2000) and amendment in 2002, Vehicle Act (1927), Motor Vehicles Ordinance (1983), The Bengal Motor Vehicle Rules (1940), The Road Transport Act (2018), National Land Transport Policy (2004), The Groundwater Management Ordinance (1985), National Biodiversity Strategy and Action Plan (2004), National Water Bodies Protection Act (2000), National 3R Strategy for Waste Management (2010), The National Water Act (2013), The Acquisition and Requisition of Immovable Property Act (2017), Noise Pollution Control Rules (2006), Right to Information Act (2009), Environmental and Social Risk

Assessment and Management Act, Involuntary Resettlement, Indigenous Peoples, Ministry of Environment and Forests (MoEF), Bangladesh Forest Department (BFD), Bangladesh Wildlife (Conservation & Security) Act (2012), RHD's Road Master Plan (2009), Environmental Courts Act (2000), The Forest Act (1927) and the Forest Amendment Act (2000), The Embankment and Drainage Act (1952), Environmental Guideline of RHD (2004), National Agricultural Policy (1999) were considered for this project.

Project Location

The project will improve 38.0 km of road across two sections: the Baraiyarhat–Heako–Fatikchhari Road (R-151, 20.0 km) and the Heako–Ramgarh Road (R-152, 18.0 km). The road runs from Baraiyarhat (Ch. 0+000; 22°53'38.0"N, 91°32'05.1"E) on the Dhaka–Chattogram National Highway to Ramgarh Bazar (22°59'58.0"N, 91°44'06.4"E). Of its length, 34.750 km lies in Mirsharai and Fatikchhari Upazilas of Chattogram District and 3.250 km in Ramgarh Upazila of Khagrachhari Hill District. The existing carriageway will be widened from 5.5 m to 11.3 m.

Project Description

The main objective of this project is to improve Baraiyerhat - Heako - Ramgarh Road as a 4-Lane Road and ensuring durable, safe and cost-saving (transportation and time) road infrastructure and integrated road communication system. This road will be internationally connected to Indian Highway by "Shillong - Agartala - Sabrum road (NH-8)". Widening of this existing road will also include widening of embankment by 1395168.59 cum earth, 9 nos. Bridges & 23 nos. Culvert construction, Sign-Signal, KM Post, Guide Post, Road Marking, etc. by Road Safety measures. To expand this road, 68.61 hector of land will be acquired. 1.50km of rigid pavement, 3850m R.C.C retaining wall, 5750m brick mashionary toe wall, 3800m M.S pipe palasiding, 4800 sqm of C.C block placing, 30000m of R.C.C saucer drain, 10000m of R.C.C 'U' drain will be constructed along with the road. Sign Signal, KM Post, Guide Post, Electronic sign, Overhead Directional Sign, Crush Barrier, Road Marking etc. will be provided after the construction of the road.

The project is jointly financed by the Government of Bangladesh (GoB) and the Third Indian Line of Credit (LoC-III), with a total estimated cost of BDT 122,631.63 lakh, comprising BDT 63,224.80 lakh from GoB and BDT 59,406.83 lakh from LoC-III. The project implementation time is June, 2020 to December, 2026.

Description of the Baseline Environment

An environmental baseline survey has been carried out in areas surrounding the proposed project site. The specific objectives of the baseline study were to gather information on the existing physical and biological environment, prevailing socio-economic condition of the areas within and around the project sites, and to assess peoples' perception on different aspects of the proposed project. Also examine baseline parameters to identify possible adverse and beneficial impacts due to the construction and operation of the project activities.

Physio-Chemical Environment

As a part of the baseline survey, different physical features covering the project site were identified and documented. Relevant data on climate, geology and soils, air quality, noise level, and water quality (surface water and groundwater) were collected through field investigation as well as secondary sources. The project area is 29 m above mean sea level and the surface geology of this region consists of deposit from Pleistocene and Pilocene period. There are few household settlements in the first 5km of the area and some cultivation near the road. The road alignment crossed by Hinguli river and adjacent to Feni River. The river tide is not strong to flood the area. Beside these two rivers, there are total of 8 Chora (Khal or Jharna) i.g, Korerhat Chora, Lokkhi Chora, Chikon Chora etc within the study area which assures higher potential of water availability. The samples of air, noise, surface and ground water were collected from pre-construction and ongoing construction stage of the project which is described in the baseline data section.

Ecological Environment

Ecological baseline assessments were conducted through field surveys, community consultations, fisheries surveys, and literature reviews to identify the floral and faunal diversity of the project area. The area supports diverse terrestrial and aquatic biodiversity, including Sal, bamboo, mahogany, Arjun, and other tree species; common birds, reptiles, and mammals; and fish species such as shing, koi, magur, rui, catla, and mrigal. The project area also encompasses Sal forest patches and portions of the Ramgarh–Sitakunda Reserve Forest, which serve as important wildlife habitats. Road widening will necessitate the felling of approximately 21,151 roadside and homestead trees under the management of the Forest Department, potentially affecting forest cover, ecological integrity, and wildlife habitats. The matter has been discussed with the Department of Forest (DoF), and necessary forest conservation measures and environmental clearance from the Department of Environment (DoE) will be pursued in accordance with applicable requirements.

Socio Economic Environment

The socio-economic baseline of the areas surrounding the proposed project sites was assessed using secondary data, primarily from the Population and Housing Census 2022. The assessment covered demographic characteristics, household size, gender distribution, religion, literacy, water supply, electricity access, sanitation, employment, business activities, and housing conditions.

Environmental Impacts and Mitigation Measures

The environmental impacts of the project activities have been assessed separately for the preconstruction, construction and operational phases of the project, with a focus on issues that could have significant negative consequences on the physical, ecological and socioeconomic environment. The current environmental setting of the project area, as well as the nature of the proposed operations, were considered when conducting the environmental impact assessment.

Anticipated Impacts and Mitigation Plan

The EIA identified and assessed potential environmental and social impacts of the proposed project during the pre-construction, construction, bridge construction, and operation phases. Key issues include changes in landscape and local hydrology, land acquisition and resettlement, removal of structures and trees, impacts on wildlife, water bodies and fisheries, soil erosion and contamination, air, noise and water pollution, drainage congestion, loss of topsoil and agricultural productivity, waste generation, and occupational health and safety. During operation, potential impacts include air and noise pollution, effects on cultural and sensitive receptors, and road safety risks. Appropriate mitigation and management measures have been proposed for each project phase to minimize adverse impacts and ensure environmental and social compliance.

Analysis of Alternatives

This section evaluates feasible project alternatives, considering their social, environmental, and economic implications to identify the most sustainable option with minimum environmental disturbance. As the project involves widening of the existing road, no major route alternatives are considered feasible.

Environmental and Social Management and Monitoring Plan

Issues	Impacts	Mitigation Measures
1. PRE-CONSTRUCTION PHASE		
1.1 Landscape/ Topography	Change in topography sue to bridges, embankments etc. and visual changes to topography	Aesthetic elements should incorporate with the design, large filling and deep cut should be avoided where possible, Vetiver grass for slope stabilization, intersections should be designed properly, tree plantation around toll plaza.
1.2 Climate	The project road is not under threat to devastating flood.	A detailed flood study should be done to assure an adequate flood release capacity by providing sufficient culverts and bridges along the alignment.
1.3 Hill cutting	The proposed excavation may cause localized slope instability, soil erosion, sedimentation, drainage obstruction, dust generation, and damage to adjacent vegetation.	Demarcate approved excavation and forest-use boundaries, implement appropriate slope stabilization measures, designate safe material storage and disposal sites, and obtain CSC and RHD approval of a site-specific hill-cutting method statement in coordination with the Forest Department.
1.4 Land Acquisition and Land Resettlement	Acquisition of 68.61-hector land and resettlement of PAPs.	Prepare Land acquisition and resettlement plan to deliver proper compensation, careful route and alignment selection, acquire minimal area of land, allocate proper compensation according to resettlement plan.

Issues	Impacts	Mitigation Measures
1.5 Agricultural Production Loss	Production of various crops will permanently loss due to road widening.	Compensation to victim family, initiatives to reduce negative impacts, increase crop production from limited lands
1.6 Removal of Commercial Structures	Commercial structures are located within the ROW which will be directly affected.	PAPs must be informed through notice so get enough time to plan and relocate structures, must be properly compensated as per RP before commencing removal.
1.7 Removal of Physical, Cultural and Other Community Structures	27 cultural structures are located within ROW	People using the infrastructure must be informed prior to removal and/or relocation, executed after discussion with the PAPs.
1.8 Damage to Public Utilities	Utility lines will have to be moved disrupting services.	Provision in design and budget for relocation of the structure, public utilities should be relocated before construction work with proper approval and permissions.
1.9 Tree Cutting and Wildlife	Road widening will necessitate the felling of approximately 21,151 roadside and homestead trees under the management of the Forest Department, potentially affecting forest cover, ecological integrity, and wildlife habitats	CSC approval before clearing vegetation, prior notice to the owners and give proper compensation according to RP, safe relocation/migration of wildlife, proper security so no wildlife is hurt, minimum two-time saplings against one tree, uproot and transplantation of rare species, prohibit harming or killing of wildlife.
1.10 Change of Local Hydrology / Drainage Congestion	Diversion through 9 bridges and 23 culverts, temporary change in local hydrology.	Proper design so no long/ short term hydrological change and drainage congestion occur, develop dredged material management plan, disposal of waste in controlled manner.
1.11 Water Bodies and Fisheries	Construction of bridges and culverts will force to migrate fishes and other aquatic species.	Proper compensation to PAPs, river flow must be undisturbed, prevent erosion and siltation at construction site, prepare fallow lands into ponds, encourage farmers for integrated farming.
2. CONSTRUCTION PHASE		
2.1 Landscape/ Topography	Cutting trees, change in landscape due to dismantling existing structures, permanent acquisition of agricultural, residential land will cause landscape change.	Ensure minimal acquisition of agricultural land, proper landscaping, construction of labour camp in suitable place, minimize clearing of vegetation, plant tree near populous area, restore affected areas to their original levels.
2.2 Loss of Top Soil	Loss of topsoil due to ground clearing, grading, excavation, trenching, vehicular and pedestrian traffic, construction and installation facilities.	Minimize extent of disturbance activities, maintain 2:1 stockpile slope, establish healthy plant cover, keep short soil storage period, keep topsoil stockpiles outside drainage, construct diversion channels and silt fences.

Issues	Impacts	Mitigation Measures
2.3 Hill Cutting	Inadequate hill-cutting controls, slope protection, erosion management, and forest conservation may destabilize slopes and adversely affect local vegetation and ecosystems.	Undertake controlled hill cutting within approved limits, implement slope stabilization, erosion and sediment control, and maintain natural drainage. Restrict vegetation clearance and wildlife disturbance, reuse suitable excavated materials, and restore disturbed areas through grading and revegetation.
2.4 Dredging and Dredged Materials	Riverbank erosion and flood at downstream, leakages and spillage from the hydraulic pipeline, impact of air quality and odor from dredge material carrying trucks, dispersion of sediments and release of high sediment from runoff.	Obtain permission from BIWTA, hydrological and river morphology consideration, stop dredging in fish spawning season, avoid sensitive areas, river bed materials and water test before and during construction.
2.5 Soil Erosion and Siltation	Soil erosion due to construction, earthworks, cut and fill operation, stockpiles, increase in water turbidity, disruption of usual photosynthesis and fish spawning process.	Reuse the excavated soil as much as possible, minimize surface excavation works during the rainy season, take precaution during rainstorms, use turfing and bioengineering work for slope protection, construct storm water interception and drainage system before construction of side slopes.
2.6 Soil Contamination	Contamination of agricultural land by dredged materials, impairment of soil structure due to dumping of construction debris.	Ensure dredged materials don't contain heavy metals, maximum retention time in hydraulic fill, handling bitumen, fuel and chemicals in construction yard and set them on impervious layer only.
2.7 Air Pollution and Dust	Impacts on air quality during the construction, emission of CO2 and NOX due to combustion of diesel from vehicles/ generator/ drilling etc.	Exhaust emissions from vehicles and equipment will comply with standards, road surfaces, excavation and construction sites will be water-sprayed regularly, proper silencer to the vehicles/generators, material to be kept covered during carrying and stock piling etc.
2.8 Noise and Vibration	Increasing noise level during construction works may disturb around. Construction equipment may generate vibration at the properties immediately adjacent to the project area.	Timing of construction activities, proper transportation movement, sound making works etc. to be carried during the scheduled times and setting muffler or silencer to noise creating machines to be ensured. Precaution will be taken while using the machines and equipment, especially nearby public and private infrastructures.
2.9 Surface Water Quality	Pollution from concrete watering, pier foundation drains, sand washing, wastewater containing high turbidity, pH in construction site.	All wastes, slurry, waste water from camp etc. shall be managed properly.

Issues	Impacts	Mitigation Measures
2.10 Groundwater Quality	Spillage oil, chemical may percolate into groundwater, extraction of excessive ground water from locality.	Proper management of waste water, spill oil etc. shall be controlled properly.
2.11 Drainage Congestion	Cause congestion by construction of bridges and culverts over the waterways, erosion from embankments.	Prepare standing water avoiding program under CSC, diversion should be caused with consideration so no congestion occurs, proper slope protection in embankment, alternative drainage for rainwater, rehabilitate drainage structures if damaged by contractors.
2.12 Vegetation	Considerable flow of trucks and workers will reduce vegetation cover, air-borne dust from hauling loose materials decrease growth of vegetation, dumped lime and cement producing hardpan soil.	Make selective and careful pruning of trees, control noxious weeds, only clear the vegetation needs to be cleared, don't burn off cleared vegetation.
2.13 Terrestrial Fauna	Potential impacts on the existing fauna due to their highly sensitive and reactive behavior.	• Labor will not indulge in hunting, trapping, or shooting wild animals; • Construction vehicles and equipment which will generate noise, should be control through soundproof muffler.
2.14 Aquatic Species	Change of dominance and the composition of the plankton due to water pollution, runoff of stored construction materials will deteriorate water parameters.	Provision of environmental training with information on the importance of biological diversity, do not dump wastes into nearby water bodies, use pingers to chase away aquatic species, ensure water species are away from construction site
2.15 Fisheries	The construction of bridges may lead to the loss of fish habitat due to increased turbidity, decreased dissolved oxygen, reduction of food, increase in suspended solids, declination of temporary benthos and plankton.	Ensure well maintained riverine transports, make an emergency oil spill containment plan, do not dump waste into water, all captured fish should be released unharmed in adjacent fish habitat, ensure earth filling in dry season.
2.16 Loss of Agricultural Production	Damage soil properties, consequent loss of crops, sand removal with wind blow and rain water runoff from road construction.	Ensure the approval from National Land Use Committee, measures to change cropping pattern, provide technical support to farmers, non-agricultural khas land should be used, fertile topsoil should be preserved, drain out water in excessive rainy season.
2.17 Pollution from Wastes	Solid waste from dismantled structures, kitchen and sewage wastes from labour camp will cause growth of flies and water born germs.	Develop waste management plan, prepare spill control procedures, train personnel on handling fuels, store dangerous goods, refueling on bounded areas.
2.18 Asphalt Hot Mix Plant, Rock Crushing, and Bitumen Supply	Noise, odor and dust from crushing, asphalt hot-mix plant, chemicals at asphalt/bitumen plant sites cause soil pollution, contamination may limit future use of agricultural land.	Cement batching and aggregate mixing plant will be located as far as possible, should observe permission of DoE and local guidelines, install dust suppression equipment, damaged should be repaired by

Issues	Impacts	Mitigation Measures
		contractor, spray water. All hot-mix plants, crushers, and batching plants will be in sealed area.
2.19 Construction Waste Disposal (Waste water, Oil, Hazardous Waste etc.	Oil, grease etc. from construction machinery, Hazardous and solid waste from construction material and food, sanitary waste, wastewater from sprinkling and washing.	Dispose waste in environmentally acceptable manner, Vehicles transporting solid waste shall be covered with tarps or nets to prevent spilling, train and instruct all personnel, provide absorbent in hazardous materials areas, provide PPE to workers.
2.20 Construction Yards	Loss of plantation and vegetation, permanent physical and visual impact on the area, semi-permanent appearance of labour camp will cause impact on local communities, pollution risk of soil and surface water.	Camp should not locate within populous or sensitive areas and shall be sheltered or sited within hoardings, training for the contractors and workers on environmental requirements and implementation.
2.21 Labour Impact	Child or forced labour may occur at the site due to poverty. Families rely on extra income by their children in order to sustain their livelihood.	Children not under age of 18 should be ensured, risk assessment should be conducted in case of children under 16, no work should be exacted from force or penalty.
2.22 Occupational Health and Safety (OHS)	Health hazard for handling hazardous materials, affected by water borne diseases and food poisoning at construction camp.	Prepare OHS plan, Provide PPE, First Aid Box should be readily available, separate accommodation and toilet for female workers.
2.23 Community Health and Safety	Outbreak of different diseases to the surrounding communities / public for improper health and safety.	Proper health and safety plan should be prepared by the Contractors prior to start construction and take action accordingly.
2.24 Traffic Congestion	Inconvenience to the people due to traffic, congestion and road accidents due to construction vehicles.	Prepare and submit a traffic management plan to the CSC and coordination of local traffic police department, ensure uninterrupted traffic movement during construction, follow BRTA traffic rules, provision for passing traffic during construction.
2.25 Road Accidents	Heavy road vehicles may cause road accidents.	Prepare proper traffic management plan.
2.26 Income/Job Opportunities	Job opportunities for executing the construction activities, income opportunity through generating small business.	Priority should be given to the local poor and affected people during recruitment, gender equity and equal wage have to be ensured.
2.27 Tree Plantation	A total of 333 trees will be cut off.	Undertake tree plantation program for one tree, two tree saplings will be planted.
Operation Stage		
3.1 Split Community	Structures attached with the road, such as interchanges, bridges, etc. would	Tree plantation along the proposed corridor would serve as physical barrier

Issues	Impacts	Mitigation Measures
	cause slight negative effect on landscape.	between the road and the existing settlements, increase aesthetic beauty.
3.2 Air Quality	Dust (PM) generated from the road surface; Toxic gases generated from vehicle's engines when burning fuel.	The road and bridge surface should be maintained periodically to limit dust generation, black smoke producing old engine driven vehicles' movement shall be prohibited.
3.3 Noise and Vibration	Noise pollution due to the movement of increased number of vehicles and wildlife particularly the birds will be affected mostly because of noise.	Hydraulic horn must be prohibited, tree plantation will reduce noise impact, also clean the air, improve landscape and eco-system.
3.4 Water Pollution (Surface and Ground Water)	Erosion on slope will add silts into water, uncontrolled release of storm water will pollute surface water, accidental spillage of hydrocarbons causes surface water pollution, new structures around road will pollute ground water.	Slope protection measures and proper maintenance, construction of sanitary public toilet and arsenic free drinking water structures, construct cross slope and longitudinal drainage.
3.5 Road Accidents/ Road safety	The increased vehicular movement and speed may result in road safety issues, vehicles may not follow speed limit having widened and free road which may cause road accidents, accidents due to non-ideal location of road crossings, sidewalks.	Enforcing speed limits and impose penalties, traffic signs will be provided to facilitate road users about speed limits, rest areas, eating establishments etc. Reflectorize lanes, median, sharp bends, proper lighting around road, should follow BRTA rules.
3.6 Income/ Job Opportunities	Development of new infrastructure of residential, commercial, social and community is expected to be established alongside the upgraded highway.	Illegal infrastructure development and encroachment alongside the road have to be checked and controlled.

Environmental Monitoring Plan

Issues	Monitoring Method	Supervise
Pre-Construction Stage		
1.1 Landscape/ Topography	Consultation with adjacent households along the road.	PIU
1.2 Climate	Consider climate condition and natural calamities occurred in the last century.	PIU
1.3 Hill Cutting	Verification of approved excavation boundaries, marked locations and limits of work against the approved drawings and permissions.	PIU
1.4 Land Acquisition and Land Resettlement	Ensure that PAPs get compensation as per RP; and Resettlement of PAPs as per the procedure of RP.	PIU and CSC
1.5 Agricultural Production Loss	Ensure that PAPs get compensation as per RP; and resettlement of PAPs as per the procedure of RP.	PIU and CSC
1.6 Removal of Commercial Structures	Safe removal/or relocation; and Handling and transport of debris.	PIU and CSC

Issues	Monitoring Method	Supervise
1.7 Removal of Physical, Cultural and Other Community Structures	The physical cultural and community structures to be relocated in stages, after consultation with local communities.	PIU and CSC
1.8 Damage to Public Utilities	Ensure respective authority of utility service providers and consumers are informed in time, inspect utilities are being relocated.	PIU and CSC
1.9 Tree Cutting and Wildlife	Notice of removal of trees will be provided. RHD or local NGOs will ensure compensation and planting of at least three trees for every one cut. Checking whether proper compensation as mentioned in RP is received by PAPs and wildlife is harmed or not.	PIU, MoEF, and CSC
1.10 Change of Local Hydrology / Drainage Congestion	Inspect waste and field management at camps and record actions taken when non-compliance recorded.	PIU, BIWTA, and CSC
1.11 Water Bodies and Fisheries	Confirming the population and change in types of fish species.	PIU, DOF and CSC
Construction Stage		
2.1 Landscape/ Topography	Consultation with adjacent households and RHD authority to get opinion on work being completed.	PIU and CSC
2.2 Loss of Top Soil	Top soil management	CSC
2.3 Hill Cutting	Monitor excavation activities, quantities, and compliance with approved boundaries, designs, and method statements, including unauthorized tree felling, vegetation clearance, and wildlife disturbance within forest areas.	PIU and CSC
2.4 Dredging and Dredged Materials	Cd, Cu, Zn, Hg, Pb, As, PCB, POPs, Hydrocarbons	CSC
2.5 Soil Erosion and Siltation	Slope protection measures; and strengthen slope stability of the embankment with special consideration at bridge and culvert construction sites.	CSC
2.6 Soil Contamination	Careful and proper handling of oil and other hazardous liquids by trained personnel, check soil parameters regularly.	CSC
2.7 Air Pollution and Dust	PM2.5, PM10, CO, SO2, NOx, O3, temperature, humidity, wind speed and wind direction.	CSC
2.8 Noise and Vibration	Measurement of noise level in dBA and vibration in velocity, acceleration, displacement.	CSC and DOE
2.9 Surface Water Quality	pH, temperature, EC, DO, Turbidity, TOC, Total P, TSS; BOD5, COD, Cd, Cu, Fe, Pb, Oil and Grease.	CSC and DOE
2.10 Groundwater Quality	pH, TDS, Cl, As, Mn, Fe, SO4, TC, FC	CSC and DoE
2.11 Drainage Congestion	Construct drainage structures as per the design; and Control erosion and siltation.	CSC
2.12 Vegetation	Ensure clearance of vegetation in accordance with the plans and check the re-vegetation done at the earliest.	CSC
2.13 Terrestrial Fauna	Monthly site inspection, examine embankments, subgrade storage areas, to confirm these facilities are not contributing to environmental degradation.	CSC

Issues	Monitoring Method	Supervise
2.14 Aquatic Species	Evaluation of existence of species; Benthos & Plankton.	CSC
2.15 Fisheries	Confirming the population and change in types of fish species.	CSC
2.16 Loss of Agricultural Production	Measurement for changing cropping pattern to compensate the loss of crop production.	CSC
2.17 Pollution from Wastes	Waste and effluents to be collected and disposed safely to the designated sites.	CSC
2.18 Asphalt Hot Mix Plant, Rock Crushing, and Bitumen Supply	Wastes and garbage from bridge construction sites to be disposed properly at the designated sites.	CSC
2.19 Construction Waste Disposal (Waste water, Oil, Hazardous Waste etc.	Checking storage, transportation, handling, and disposal of hazardous waste.	CSC
2.20 Construction Yards	Undertake good housekeeping practices inspection weekly and report results and record what actions taken to mitigate.	EU and CSC
2.21 Labour Impact	Ensure no child is hired for the work.	CSC
2.22 Occupational Health and Safety (OHS)	Check quality of food and accommodation, safe water supply, hygiene at toilet site, separate toilet for female workers, heavy materials are stored and handled properly or not.	CSC
2.23 Community Health and Safety	Control movement of project traffics especially at densely populated areas.	CSC/ Local Authority
2.24 Traffic Congestion	Traffic volume, composition and speed.	CSC
2.25 Road Accidents	Evaluation of effect of traffic schedules, check vehicle fitness.	CSC
2.26 Income/Job Opportunities	Ensure local poor people are getting opportunities and no discrimination in any side.	CSC
2.27 Tree Plantation	Ensure proper tree plantation along the alignment.	CSC
Operation Stage		
3.1 Split Community	Consultation with adjacent households and RHD to get opinion on work being completed.	RHD
3.2 Air Quality	PM2.5, PM10, CO, SO2, NOx, O3, temperature, humidity, wind speed and wind direction should be inspected.	RHD
3.3 Noise and Vibration	Measurement of noise dB(A) and vibration in velocity, acceleration, displacement.	RHD
3.4 Water Pollution (Surface and Ground Water)	SW: pH, DO, Turbidity, TOC, Total P, TSS; TSS, BOD5, COD, Cd, Total Cr, Cu, Fe, Pb, Oil and Grease; GW: pH, TDS, Cl, As, Mn, Fe, SO4, TC, FC should be inspected.	RHD
3.5 Road Accidents/ Road safety	Traffic signs, kilometre posts, speed breakers (where required) along the road and traffic signal at road crossing have to be provided.	RHD
3.6 Income/ Job Opportunities	Control illegal infrastructure development and encroachment alongside.	RHD

Institutional responsibilities

The Roads and Highways Department (RHD), under the Ministry of Road Transport and Bridges (MoRTB), is the Executing Agency responsible for project studies, design, construction, and subsequent operation and maintenance. The Deputy Project Director at RHD Headquarters will serve as the Chief Resettlement Officer (CRO), overseeing resettlement policy guidance, coordination, planning, monitoring, and reporting. The contractor will implement the ESMP during construction, while the Construction Supervision Consultant (CSC) will supervise its implementation, monitor compliance, and report progress to RHD. Resettlement implementation will be supported by institutional capacity enhancement of RHD and Deputy Commissioners' offices, engagement of an INGO/consulting firm, and formation of relevant committees, including GRC, PAVC, and RAC.

Grievance Redress Mechanism

The implementing agency will proactively prevent and minimize grievances through appropriate mitigation measures and community liaison activities. A Grievance Redress Mechanism (GRM) will be established to inform Project Affected Persons (PAPs) and local communities of their rights, complaint procedures, and available redress channels. Potential grievances may include construction-related noise, improper solid waste management, pollution, and traffic disturbances during construction and operation. RHD, contractors, and designated stakeholder liaison personnel will be responsible for implementing and monitoring the GRM.

Community Consultation

Stakeholder consultations were conducted throughout the EIA process to ensure community participation and incorporate local concerns into project planning and implementation. FGDs, public/community consultations, walk-in interviews, and KIIs were carried out within the project influence area with prior notice. Views, concerns, and recommendations from various stakeholder groups, particularly project-affected people, were documented and incorporated into the EIA. All stakeholders were given equal consideration, and appropriate compensation was recommended for adverse project impacts. The public consultation as per Rule 16 of ECR 2023 will be conducted after the draft submission of report to DOE.

Emergency Response and Disaster Management Plan

Disaster management measures shall address potential hazards, including earthquakes, cyclones, wildfires, road accidents, and structural failures, considering the area's medium wind risk and high seismic intensity. An Emergency Action Committee, chaired by the RHD Project Director, shall coordinate emergency preparedness, communication, warning, and response during construction and operation. The contractor shall prepare and implement a Worker Health and Safety Plan, ensuring adequate protective equipment, trained emergency

responders, first-aid facilities, safe work practices, and compliance with occupational health and safety requirements.

Conclusions & Recommendations

The project is expected to generate significant socio-economic benefits by improving connectivity between Bangladesh and India, facilitating trade, tourism, and industrial development, reducing traffic congestion and vehicle emissions, and ensuring safer and smoother transportation. Although some adverse environmental and social impacts are anticipated, particularly during construction, these are generally manageable through effective implementation of the Environmental and Social Management Plan (ESMP). Any residual impacts will be addressed through appropriate compensation and environmental enhancement measures. Overall, the project is expected to have a positive environmental and socio-economic outcome

CHAPTER 1 INTRODUCTION

1.1 Background

Road transportation being the predominant mode of transport in Bangladesh accounting for about 80% of total traffic moved, road quality does not correspond to the Asian Highway standards. The existing highway links are primarily two-lane roads, and rail links are primarily single track. Most of Bangladesh's road network needs to be upgraded for handling modern diversified vehicles. However, Bangladesh has already taken many steps to strengthen its regional and international transport connectivity, specially aiming to facilitate trade between Bangladesh and the north-eastern states of India. The government took up an 848.30 crore project to widen Baraiyerhat-Heako-Ramgarh road that would broaden bilateral trade between Bangladesh and India. The widening of the 38km Baraiyerhat-Heako-Ramgarh road from 5.5 metres now to 11.3 metres in Ramgarh upazila under Khagrachari district would be performed by the Roads and Highways Department between July 2020 and December 2022.

A memorandum of understanding between the Government of the People's Republic of Bangladesh (GOB) and Government of the Republic of India (GOI) for extending a 3rd Line of Credit (LOC) was signed on 5th April 2017 at New Delhi. The widening of Ramgarh to Baraiyerhat Project was included in this LOC-III. India will provide Tk 59,406.83 lakh BDT for the project from its third line of credit for the project and Bangladesh would bear the rest of the cost. The project would contribute to establishing road network between the Chattogram port and the Ramgarh land port which will open the door for two-way trade between Bangladesh and India through Sabram/Ramgarh land port. The proposed road is 72km off from the Chattogram port and 201km off from Dhaka. Total Length of the project is 38.00 km. Department of Roads and Highway is the executing agency and planning commission of concerned division.

As a result of the development of the proposed project, the existing road network will be improved and the target of preservation and repair of existing road networks, expansion and development targets will be implemented to achieve the target of Vision 2021. This project will cover the population of Mirshari Upazilla of Chattogram District and Ramgarh Upazilla of Khagrachari District. The road will reduce the poverty of the project area by providing job opportunity especially to youth and women labour. As well as increase export-import business, enhance socio-economic development of the project area.

As development activities are of prime importance for the economic growth and fulfillment of basic needs of the society, the environmental aspects of development activities must be considered, and due attention must be paid protecting the environment. This project impacts the environment which needs to be assessed and evaluated properly.

Widening of a 38 km road (with 9 bridges & 23 culverts) may have some significant environmental and social impacts which need to be assessed as a part of the feasibility study of the project being considered. Also, according to the Environment Conservation Rules

(ECR) 1997, Construction/ reconstruction/ expansion of road (regional, national & international) fall under the "Red" category. A red category project is typically associated with significant adverse impacts to the environment and conducting a full-scale Environmental Impact Assessment (EIA) is mandatory (DoE, 1997).

Environmental & Social Impact Assessment (EIA) provide a mechanism for executing sustainable development and it is also becoming a very significance revision before authorizing of any project plan. EIA helps to decision making process whether the project has beneficial or harmful effects for the environment & societal. Both onsite and off-site environmental impacts can be reduced through undertaking EIA for proposed project construction activities. This study mainly concentrates on to find out potential environmental & social impact during the construction, operation and maintenance phase of the project. It also finds out the effective mitigation measures of the adverse impacts that will be helpful for the surrounding environment. Primary data were collected from field survey, focus group discussion and lab analysis. Most of the impacts and other consequences are identified based on public perception and the interview of the key personnel. Secondary data were also collected for conducting the study. The EIA study founds some major negative impacts such as loss of land, loss of local trees varieties, and degradation of surface water quality & accidents problem during construction, etc. But analyzing the overall impact of the environment & social, the EIA study found that the possible negative impact is not so high and the project can be implemented. Different environmental management plans are suggested for reducing the potential negative impact of the proposed construction project.

1.2 Project Objective

The main objectives of the project are-

- To improve Baraiyerhat-Heako-Ramgarh Road;
- To extend trade between Bangladesh and India;
- To increase export-import business;
- To enhance the socio-economic development of the project area.

1.3 Scopes of EIA

The scope of Environmental & Social Impact Assessment (EIA) study associated with proposed road and Bridge project and ancillary facilities comprise with the acts and present a general description of the overall project activities, describing all the impacts, mitigation measures and estimation cost in every stage of work. The specific scopes of this EIA are to:

- Present a description of the pre-project environment (baseline environment);
- Delineate the significant environmental & social issues found and believed to be involved;
- Identify the environmental & social impacts of the project and quantify them to the extent possible;

- Suggest the plan for management of the environmental & social impacts, during the implementation and operation of the project;
- Suggesting the environmental & social safeguard issues to be incorporated in the tender document for the implementation of the sub-project.

1.4 Objective of EIA

The overall objective of the EIA of the proposed project is to identify potential environmental and social impacts both positive and negative in all phases of the project, to recommend mitigation measures for avoiding or reducing adverse environmental impacts and to enhance positive impacts. The specific objectives of the EIA are:

- A review of the environmental legislative, regulatory and policy guidelines and considerations relating to the implementation of the project;
- A general description of the project and existing physical, biological and socioeconomic conditions;
- To identify environmental impacts resulting from the project activities during both construction and operational phases of the project, and to suggest appropriate mitigation measure.
- Identification and assessment of the potential impacts on the natural and human environment in the project area, from the construction of the project;
- Analysis of different alternatives to the project in terms of environmental and social perspectives;
- Consultation with the locals/stakeholder involving concerned people in order to identify and act on any undocumented or perceived environmental issues;
- Identification of mitigation measures including monitoring framework in the form of an Environmental and Social Management Plan (ESMP) Approach and Methodology;
- Recommendation and conclusions in order to operate the project works in an environmentally safe and sound manner.

1.5 Methodology

The task of preparing this EIA report consisted of the following sequential steps:

- Identification of all the activities to be undertaken under the project;
- Identification and screening of the environmental parameters relevant to the proposed activities through a scoping process which includes consultation with different levels of stakeholders i.e., RHD officials, local people, from relevant agencies, field visits and consideration of baseline conditions;
- Field visits to capture environmental and social baseline;
- Assessment of potential risk and impacts on relevant environmental and social parameters;
- Recommending mitigation measures as per mitigation hierarchy to address the potential negative impacts;

- Preparation of Environmental and Social Management Plan (ESMP);
- Provide inputs for the preparation of Environmental & Social Monitoring plan (ESMoP)

The field visits in the project sites helped to identify the environmental parameters/components (relevant to the project actions) which are likely to be affected. The field visit also included participatory approach, which involved discussions with local people in order to identify the perceptions and priorities of the stakeholders in and around the study area. Apart from the local people, information was also obtained from the businessmen and social elites. Were also carried out. Information was also derived from secondary sources such as different reports, journals, satellite imagery analysis, etc.

1.6 Limitations

As described in the earlier, development of design specific EIA is not practical. Therefore, this EIA study deals with the expertise opinion on the feasibility of the subproject and its possible implementation arrangements from the perspective of environment and experience gained from previous road projects being implemented in Bangladesh. This EIA is indicative in nature given the information lacks as illustrated in earlier paragraphs and thus intend to be used as environmental advice to the detail design consultants. Once the detail design is done, this EIA needs to be updated with site specific information, environmental plan and mitigation measures.

1.7 EIA Study Team

A multidisciplinary team of EIA experts having experience of conducting Environmental Impact Assessment of large scale industrial and infrastructural development projects. Table represents the professional's names with their position.

No	NAME	POSITION
1.	Md. Imam Zafor	Environmental Specialist
2.	Engr. Md Toufiq Imam	Environmental Engineer
3.	Engr. Mahmudul Hasan	Ecological and Biodiversity Expert
4.	Mustafizur Rahman	Social Impact Specialist
5.	Engr. Maisha Maliyat Aronna	Jr. Environmental Engineer
6.	Sohel Rana Shipon	Field Manager
7.	Zahin Yousuf Reza	Field Enumerator
8.	Md. Imran Hossen	Field Enumerator

1.8 Contents of the Report

This report includes the following main elements;

Chapter 1: Introduction

This chapter consists of the background of the project along with the objectives, scope and the methodology of preparing the EIA report. This chapter also includes the organization off the total EIA report.

Chapter 2: Legislative Framework

In this chapter the national and international laws and policies are described which are relevant to the environmental aspects of the project. Finally, the requirements of making EIA for this project according to DOE and RHD are described.

Chapter 3: Project Description

This chapter includes the background and objectives of the proposed project. The category and need, location, present traffic, layout, land use map, cost of the project is described here. In total, this chapter gives a detailed idea about the project.

Chapter 4: Baseline Environmental Condition

This section describes relevant physical, biological and socio-economic conditions within the study area.

Chapter 5: Anticipated Impacts and Mitigation Measures:

This section identifies the potential positive and negative environmental, physical and socio-economic impacts of the project as well as describes the mitigation measures that are suggested for the impacts in this project.

Chapter 6: Analysis of Alternatives

This section discussed the alternatives options of the proposed project.

Chapter 7: Public Consultation

This section involves presentation of the finding on impacts and benefits during a consultation and information disclosure session to inform key stakeholders and affected communities about the issues identified and to invite their comments.

Chapter 8: Environmental Management Plan

This chapter includes environmental management and monitoring plan prepared for all phases of the project.

Chapter 9: Emergency Response Plan & Disaster Impact Assessment

This chapter includes risk assessment utilized in this EIA as the primary tool to support environmental and socio-economic impact assessment and also impact of any disaster on the project.

Chapter 10: Conclusion and Recommendations

This chapter includes the conclusion and some recommendations are suggested here about the proposed project.

CHAPTER 2 LEGISLATIVE, REPUTATION AND POLICY CONSIDERATION

2.1 Policy, Legal and Administrative Framework

The Environmental Impact Assessment (EIA) has been performed in accordance with the rules, laws and regulations governed by the Bangladesh Government. This Chapter provides a description of the regulatory framework applicable to the proposed project. It highlights environmental, health & safety and social regulations with applicable permits and standards in association with the project. It broadly focuses on the:

- Legal Enforcement Agencies at National Level;
- Applicable national and local Environmental and Social Laws, Regulations and Policies;
- International & National Environment Standards / Guidelines; and
- Applicable International Conventions / Protocols.

Regulatory requirements toward protection and conservation of environment and various environmental resources and also toward protection of social environment from adverse impact of projects and activities associated with them have been enunciated by the Government of Bangladesh as well as financiers. Pertinent among these requirements are summarized as under.

2.1.1 Relevant Regulations of GoB

The Government of Bangladesh has laid out various policy guidelines, acts and regulation pertaining to environment and social aspects (Table 2-1), demonstrate relevant GOB regulations and their relevance to his project.

Table 2-1: Summary of E & S Regulations of GOB

SN	Acts/Rules/Policies/ Plans	Key provisions and Purpose	Relevance to this Project
1	National Environmental Policy, 1992	The objectives of the policy are to maintain ecological balance and overall development via protection and improvement of the country and thereby protect the country against natural disasters.	EIA has been prepared ensuring sustainable development and environmentally sound management of the natural resources.
2	National Environmental Management Action Plan (NEMAP), 1995	The Act aims to regulate waste management in order to protect health and the environment and provide measures for the prevention of pollution and ecological degradation, and securing ecologically-sustainable development.	The EIA has been prepared considering the objectives of the NEMAP

SN	Acts/Rules/Policies/ Plans	Key provisions and Purpose	Relevance to this Project
3	National Land Use Policy, 2001	Deals with several lands uses including agriculture (crop production, fishery and livestock), housing, forestry, industrialization, railways and roads; tea and rubber and identifies land use constraints in all these sectors.	Land use pattern are being changes due to the project activities.
4	National Fisheries Policy, 1998	Preservation, management and exploitation of fisheries resources in inland open water, fish cultivation and management in inland closed water; prawn and fish cultivation in coastal areas and preservation, management and exploitation of river fisheries resources.	Water pollution due to project interventions may affect the water quality of the different river.
5	The Environment Conservation Act, 1995 and subsequent amendments until 2010	Defines applicability of environmental clearance; regulation of development activities from environmental perspective; framing applicable limits for emissions and effluents; framing of standards for air, water and noise quality; formulation of guidelines relating to control and mitigation of environmental pollution, conservation and improvement of environment and declaration of Ecologically critical areas.	Environmental issues are taken care of under this act.
6	Environmental Conservation Rules, 2023 and subsequent amendments until 2010	Declaration of ecologically critical areas; requirement of environmental clearance certificate for various categories of projects; requirement of EIA as per category; renewal of the environmental clearance certificate within 30 dates after the expiry; provides standards for quality of air, water and sound and acceptable limits for emissions/discharges from vehicles and other sources.	Environmental issues are taken care of under this rule.
7	Environment Court Act, 2000 and amendment in 2002	Provides the jurisdictions of environment court, the penalty for violating courts order, trial procedure in special magistrate's court, the power of entry and search, the procedure for investigation, procedure and power of environment court, the authority of environment court to inspect, appeal procedure and formation of environment appeal court.	Will be applicable in case of violation of environment court act, 2000.

SN	Acts/Rules/Policies/ Plans	Key provisions and Purpose	Relevance to this Project
8	The Vehicle Act, 1927; The Motor Vehicles Ordinance, 1983, and The Bengal Motor Vehicle Rules, 1940, The Road Transport Act, 2018.	Exhaust emissions, vehicular air and noise pollution, road/traffic safety, fitness of motor, vehicles and parking.	Substantial number of vehicles will be in operation during construction phase of this project.
9	National Land Transport Policy (NLTP), 2004.	This policy introduced the concept of long-term network planning and integration of transport policy, planning and appraisal across land transport modes. Each sub-sector undertakes physical and institutional improvement in line with its long-term policy. As indicated in the NLTP, environmental adaptation needs to be taken into account in project assessment which will help to mitigate climate change.	There will be enormous movement of the construction vehicles and public transport of construction materials and workers.
10	The Groundwater Management Ordinance, 1985.	Management of groundwater resources installation of tube wells at any place after licensing from Upazila-Parishad.	Licenses/permissions will be required prior to installation of tube wells for labor camp.
11	National Biodiversity Strategy and Action Plan. 2004.	Converse and restore the biodiversity of the country for well-being of the present and future generations; maintain and improve environmental stability for ecosystems; ensure preservation of the unique biological heritage of the nation for the benefit of the present and future generations;	Project will comply with this plan by conserving biodiversity of the Shal forest, river within the influence area.
12	National Water Bodies Protection Act, 2000	The characterization of water bodies as river, canal, tank or floodplain identified by municipalities in division and district towns shall not be changed without approval of concerned ministry.	This relevant as some water bodies are located within the boundary and adjacent to the project boundary.
13	National 3R Strategy for Waste Management, 2010	The strategy for solid waste management is essential in order to minimize the environmental, social and economic problems by applying 3R (reduce, reuse & recycle strategy.	This strategy is applicable for project construction & the management of construction waste.
14	The National Water Act, 2013	The National Water Act, 2013 is based on the National Water Policy, 1999 and provides the legal framework for integrated development, management, abstraction, distribution, usage, protection and	The project will comply with provisions of the Act by ensuring that waste water disposal structures intended to control runoffs from

SN	Acts/Rules/Policies/ Plans	Key provisions and Purpose	Relevance to this Project
		conservation of water resources in Bangladesh. The Act authorized DOE to prevent water pollution.	project area (construction work and labor camps) into the aquatic environment.
15	The acquisition and Requisition of immovable property Act, 2017	Current GOB land acquisition act refers to acquisition and requisition of land and address the respective right holders. Compensations to be paid including 300% premium for affected land.	Around 68.61 hectares of land is selected for the widening of road. But there are some households, cultivable lands, gardens within the project boundary, so, proper resettlement will be required.
16	Noise Pollution (Control) Rules, 2006.	Prevention of noise pollution and standards for noise levels.	This is relevant to identify the potential impact on health and wellbeing of workers and the surrounding communities.
17	Right to Information Act, 2009	The Act makes provisions for ensuring free flow of information and people's right to information. The freedom of the thought, conscience and speech is recognized in the constitution as a fundamental right and the right to information is an alienable part of it. It is expedient and necessary to make provisions for ensuring transparency and accountability.	This Act provide legal bindings to disclose the EIA report of this project.
18	Environmental and Social Risk Assessment and Management	To conduct an environmental and social assessment relating to these risk and impacts, and design appropriate measures to avoid, minimize, mitigate, offset or compensate for them, all as required under Environment and Social Assessment and Management (ESS) adopt differentiated measures so that adverse impacts do not fall disproportionately on the disadvantaged or vulnerable and they are not disadvantaged in sharing development benefits and opportunities.	• Project components will be thoroughly screened to ensure that they are covered by and meet the requirements of ESS and Governments laws and regulation. • Environmental & Social risk and impacts have been identified based on surveys and consultations with primary stakeholders including communities and implementing agencies. • EIA will be prepared based on the screening and survey outcomes.

SN	Acts/Rules/Policies/ Plans	Key provisions and Purpose	Relevance to this Project
19	Involuntary Resettlement	Avoid and minimize involuntary resettlement by exploring project design alternatives. Avoid forced eviction. Mitigate unavoidable adverse impacts from land acquisition or restrictions on land use by providing compensation at replacement cost and assisting displaced persons in their efforts to improve, or at least restore, livelihoods and living standards to pre-displacement levels or to level prevailing prior to the beginning of project implementation, whichever is higher. Improve living condition of poor or vulnerable persons who are physically displaced, through provision of adequate housing, access to services and facilities, and security of tenure. Conceive and execute resettlement activities as sustainable development programs.	Land will be required for widening, upgradation works in identified corridors and possibly for rehabilitation corridor works, curve/geometric improvements, blind spots, etc. Hence impacts on land, private and community owned assets including structures, trees and crops within existing and proposed ROW is likely. Physical and economic displacement too is very likely.
20	Indigenous Peoples	Ensure that the development process fosters full respect for affected parties, human rights, dignity, aspirations, identity, culture and natural resource-based livelihoods. Promote sustainable development benefits and opportunities in a manner that is accessible, culturally appropriate and inclusive. Improve project design and promote local support by establishing and maintaining an ongoing relationship based on meaningful consultation with affected parties.	This Act will identify the measures to minimize disruption of the livelihoods due to the project development.
21	Ministry of Environment & Forests (MoEF)	The MoEF is the nodal agency in the administrative structure of the Central Government for planning, promoting, co-ordination and overseeing the implementation of environmental and forestry programs. It oversees all environmental matters in the country and is a permanent member of the Executive Committee of the National Economic Council. Its principal activities include: • Conservation & survey of flora, fauna, forests and wildlife;	This Act will identify the potential impact on environment, flora, fauna of the project area.

SN	Acts/Rules/Policies/ Plans	Key provisions and Purpose	Relevance to this Project
		• Forestation & regeneration of degraded areas and protection of environment in the frame work of legislations; • Prevention & control of pollution.	
22	Bangladesh Forest Department (BFD)	It was established under the MoEF and is responsible for identifying and declaring of certain areas as reserved or protected or private forest lands. It implements the provisions of Forest Act, 1927 and National Forestry Policy, 1994. It's also responsible for wildlife preservation and protection through implementation of Wildlife (Preservation & Security) Act, 2012.	This act will take care of the Shal forest present in the project location.
23	Bangladesh Wildlife (Conservation & Security) Act, 2012	This Order aims to protect and conserve wildlife in Bangladesh. Wildlife preservation, conservation and management fall within the jurisdiction of the Forestry Department. The Act has adopted new types of protected areas for conservation and protection of wildlife resources, created avenue for community conserved areas and also community-based management of protected areas.	This Act is relevant to the project as intervention will affect wildlife habitation, obstruct movement of the animals of the area.
24	RHD's Road Master Plan, 2009	The objectives of RHD's road master plan are: • Protecting the value of RHD's road and bridge assets; • Improving the connectivity of the road network; • Enhancing and developing the strategic road network to meet economic and traffic growth targets; • Improving the zilla road network to enhance connectivity to the country's growth targets; • Improving road safety to reduce road accidents; • Provide environmental and social protection; • Outline the institution improvements required for RHD.	According to the plan, the physical and social environment must be protected from adverse effects of road construction.
25	Environmental Courts Act, 2000	The Environment Court Act, 2000 has been enacted in order to establish environmental courts in each administrative division of	According to this act, government can take legal actions if any environmental

SN	Acts/Rules/Policies/ Plans	Key provisions and Purpose	Relevance to this Project
		Bangladesh. This Act sets out policy for effective pursuance and completion of legal proceedings related to environmental crimes. Under this Act the Director General of the DOE has the power to impose heavy penalties to industrial polluters who are dumping untreated wastewater into the environment or not operating their legally mandated ETPs.	problem occurs due to project interventions.
26	The Forest Act (1927) and the Forest (Amendment) Act (2000)	The Forest Act (1927) was enacted to control trespass, illegal resources extraction from forests and to provide a framework for the forestry revenue collection system. It is the main legislative context for forestry protection and management in Bangladesh. The Act allows for the notification of forest reserves in which the government, through the Forest Department, regulates the felling, extraction and transport of forestry produce in Bangladesh.	The Act is relevant to the project as construction of the project road will require cutting of a lot of trees.
27	The Embankment and Drainage Act, (1952)	This Act consolidates the laws relating to Embankments and drainage. It provides provision for the construction, maintenance, management, removal and control of embankments and water courses for the better drainage of lands and for their protection from floods, erosion or other damage by water.	Disposal of dredged spoil may create drainage obstruction. So, adherence to relevant section of the Act must be addressed in the environmental assessment.
28	Environmental Guideline of RHD, (2004)	RHD will seek to minimize the impact of its activities on the environment, including those activities of its consultants, contractors and agents. The Department's specific environmental goals and objectives are: minimize air pollution, reduce noise, avoid water pollution, disrupting of business, minimize resettlement and land acquisition, reduce danger of accident, ensure sewage and waste disposal facilities, ensure labour healthcare, protect cultural heritage.	According to the guideline, any impacts due to road construction activities needed to be minimized and proper compensation should be paid to the affected people.
29	National Agriculture Policy, (1999)	This policy aims to make the nation self-sufficient in food through increasing production of all crops including cereals and ensure a dependable and secure food system	According to the policy alignment of the proposed project must be selected carefully so that acquisition

SN	Acts/Rules/Policies/ Plans	Key provisions and Purpose	Relevance to this Project
		for all. One of the objectives of this Act is to preserve and develop land productivity. The policy particularly stresses on research and development of improved varieties and technologies for cultivation in water-logged and salinity affected areas. The policy also recognizes that adequate measures should be taken to reduce water-logging and salinity and provide irrigation facilities for crop production.	of fertile agricultural land is minimal. Moreover, adequate measures should be taken to reduce water-logging and hamper of irrigation system due to construction of the project road.

2.1.2 Applicability of the Legal Framework in the Project

The Environmental Conversation Rules (ECR) 1997 (DoE) classifies projects into four categories according to potential environmental impacts: (1) Green; (2) Orange A; (3) Orange B; and (4) Red. Green category projects are those with mostly positive environmental impacts or negligible negative impacts; Orange A category projects are those with minor and mostly temporary environmental impacts for which there are standard mitigation measures; Orange B category project are those with moderately significant environmental impacts; while Red category projects are those with significant adverse environmental impacts.

According to the Environment Conservation Rules (ECR) 1997, widening of Baraiyerhat-Heako-Ramgarh road falls into category red. Since widening of a national highway is under red category. The EIA has been carried out following the guidelines of the Department of Environment (DoE).

CHAPTER 3 DESCRIPTION OF THE PROJECT

3.1 Introduction

3.1.1 Category

In the Sector Strategies, Program and Policies of Accelerating Growth and Reducing Poverty (Part-2) of the 7th Year Plan (SFYP) (2016-2020) there is a target for construction of 300 kilometer 4-Lane roads, 340 kilometers other that 4-Lane roads, improvement / rehabilitation of 2500 kilometer roads, construction of 7000-meter flyover/ overpass, construction of 14800-meter bridge/ culvert and reconstruction of 6800-meter bridge/ culvert under Roads & Highway Department (RHD) achieve up to 2016-2017, 5.50 kilometer 4-Lane road construction and 16.68 kilometer road construction without 4-Lane, 958.819 kilometer road development/ rehabilitation, 4636.40 meter bridge/ culvert construction and 2191.28 meter bridge/ culvert reconstruction. The project has been proposed as part of acquiring the remaining residual targets.

As a result of the development of the proposed project, the existing road network will be improved and the target of preservation and repair of existing road networks and expansion and development will be implemented to achieve the target of Vision 2021.

A memorandum of understanding between the Government of the People's Republic of Bangladesh (GoB) and Government of the Republic of India (GOI) for extending a 3rd Line of Credit (LOC) was signed on 5th April 2017 at New Delhi. The widening of Ramgarh to Baraiyerhat project was included in this LOC- III. Total widening of the 38 km Baraiyerhat-Heako-Ramgarh road from 5.5 meters now to 11.3 meters in Ramgarh upazila under Khagrachari district would be performed.

3.1.2 Need for the Project

Due to its location in Bangladesh, this road can serve as a vital link between neighbouring country India. This road would broaden bilateral trade between India and Bangladesh. The implementation of the project would establish a safe, strong, sustainable, developed road network, reduce congestion and time and cost-efficient road transport network between these two countries. This road will also reduce vehicle operation cost. Two-way commerce between these two countries will expand which will be beneficial to both nations. This project would also contribute to establishing road network between the Chattogram port and the Ramgarh land port and open the door for two-way trade between India and Bangladesh through Sabrum/Ramgarh land port. It will also develop tourism facilities. This project will be internationally connected to Indian Highway by "Shillong-Agartala-Sabrum Road (NH-8)". This road will meet up traffic demand and would reduce in travel time and congestion. It will facilitate the socio-economic conditions of the people in this area. This road will also reduce pollution by reducing fuel usage due to better quality of roads and will also reduce vehicle maintenance cost. This will also provide employment opportunities for skilled, semi-skilled and unskilled labour during construction and operation stages of construction period.

It will impart specialized skills to them to be eligible for such employment in different projects.

3.2 Location of the Project

Under this project, a total of 38.0 km of road will be improved. The project comprises two road sections: the Baraiyarhat–Heako–Fatikchhari Road (R-151), 20.0 km long, and the Heako–Ramgarh Road (R-152), 18.0 km long. The alignment starts at Baraiyarhat (Ch. 0+000) on the Dhaka–Chattogram National Highway and ends at Ramgarh Bazar. Of the total length, 34.750 km lies within Mirsharai and Fatikchhari Upazilas of Chattogram District, and the remaining 3.250 km lies within Ramgarh Upazila of Khagrachhari Hill District. The existing carriageway will be widened from 5.5 m to 11.3 m. The geographic coordinates of the start point at Baraiyarhat are 22°53'38.0"N, 91°32'05.1"E, and those of the end point at Ramgarh are 22°59'58.0"N, 91°44'06.4"E.

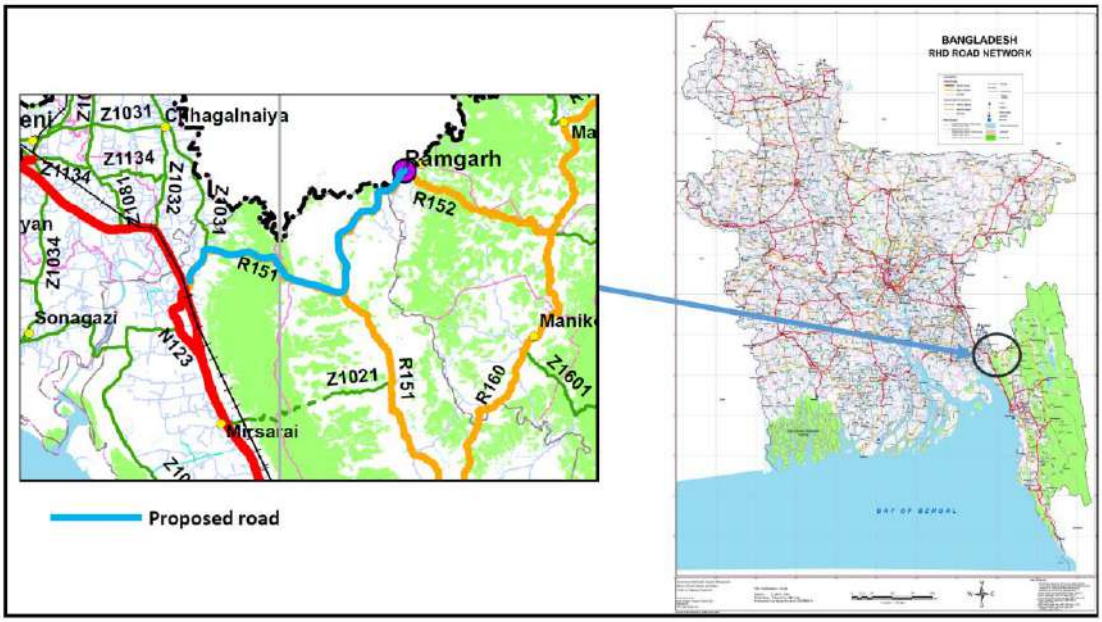

Figure 3-1: Project location in Bangladesh



Figure 3-2: Proposed Road (for improvement) alignments from Baraiyerhat - Heako - Ramgarh Road on satellite map (R151 & R152)

3.3 Various Components of the Project

3.3.1 Construction of Road

The 4-Lane Road construction would widen the 5.5-meter road to 11.3-meter road. 68.61 hector lands will be acquired for this project. 36.50 km of existing pavement will be widened, risen and strengthen during the construction. A rigid pavement of 1.50 km would be constructed. As well as 3800.00 m of M.S pipe palisading will be provided to secure enclosure. The project will be needed 4800.00 sqm of C.C block placing, 30000.00 m of R.C.C saucer drain and 10000.00 m of R.C.C "U" drain. Sign, Signal, KM post, guide post, electronic sign, overhead directional sign, crush barrier, road marking etc. will be provided after the completion of the road construction.

3.3.2 Construction of Bridge Span and Viaduct Spans

The project road has several numbers of bridges and culverts along its length. The project area is situated in hilly terrain and there are also two rivers in the study area. The bridge is being designed as R.C.C bridge. A total of 9 major and minor bridges will be built along the project road. To provide the cross-drainage facilities, R.C.C box culvert would be constructed to accomplish the project. The total number of box culverts along the project road is 23. Also, 3850.00 meter of R.C.C retaining wall and 5750.00 meter of brick masonry toe wall will be constructed.

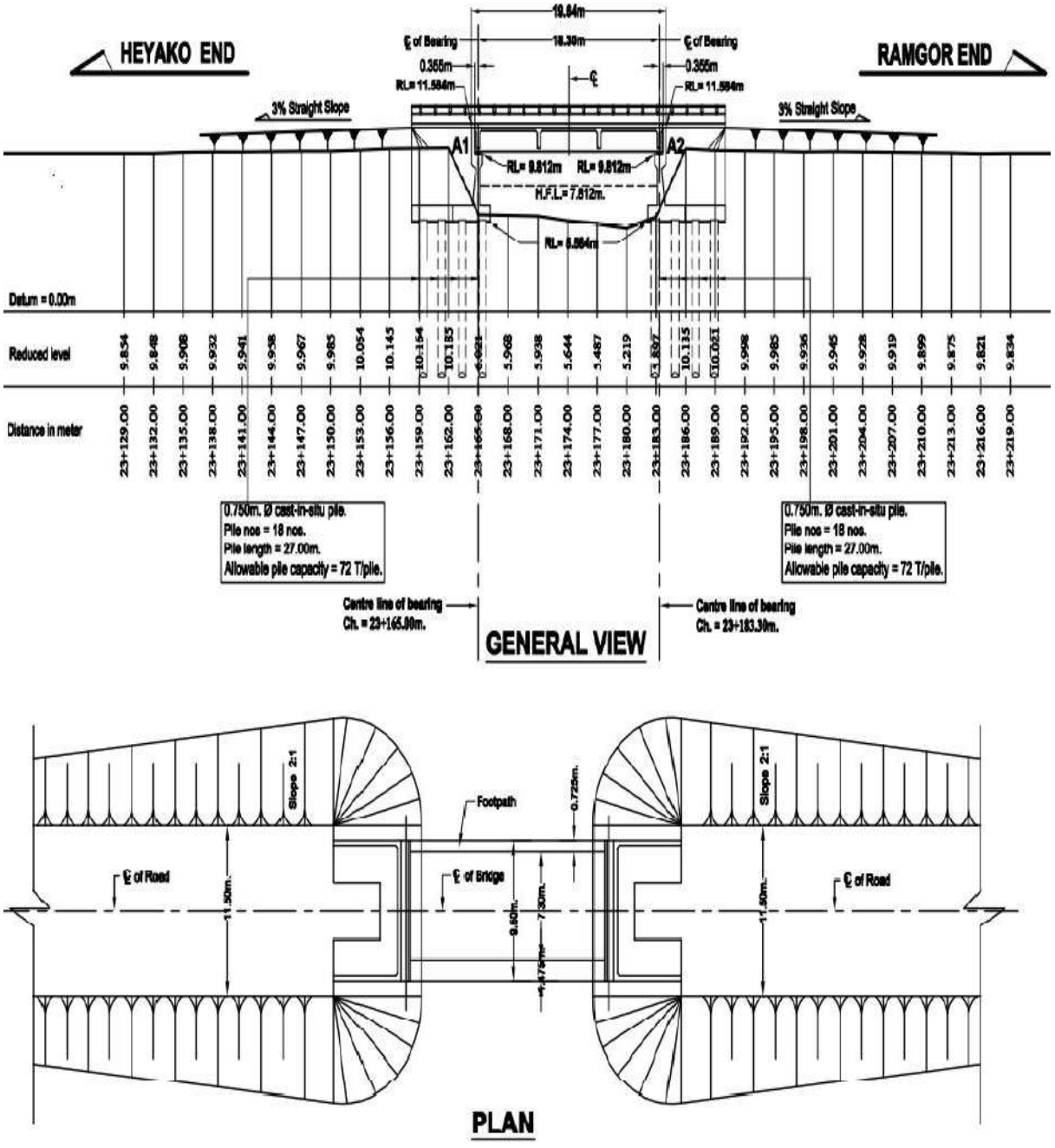

Figure 3-3: General and plan view of proposed bridge

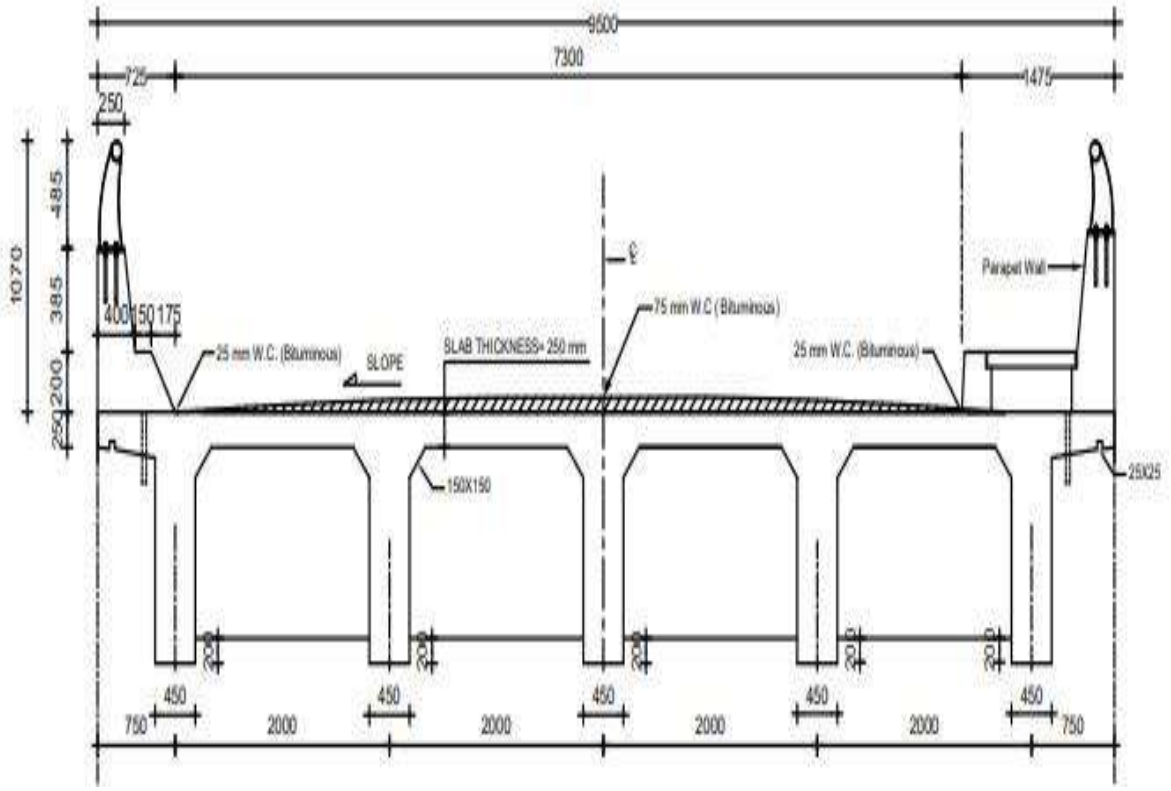

Figure 3-4: Deck slab of proposed bridge

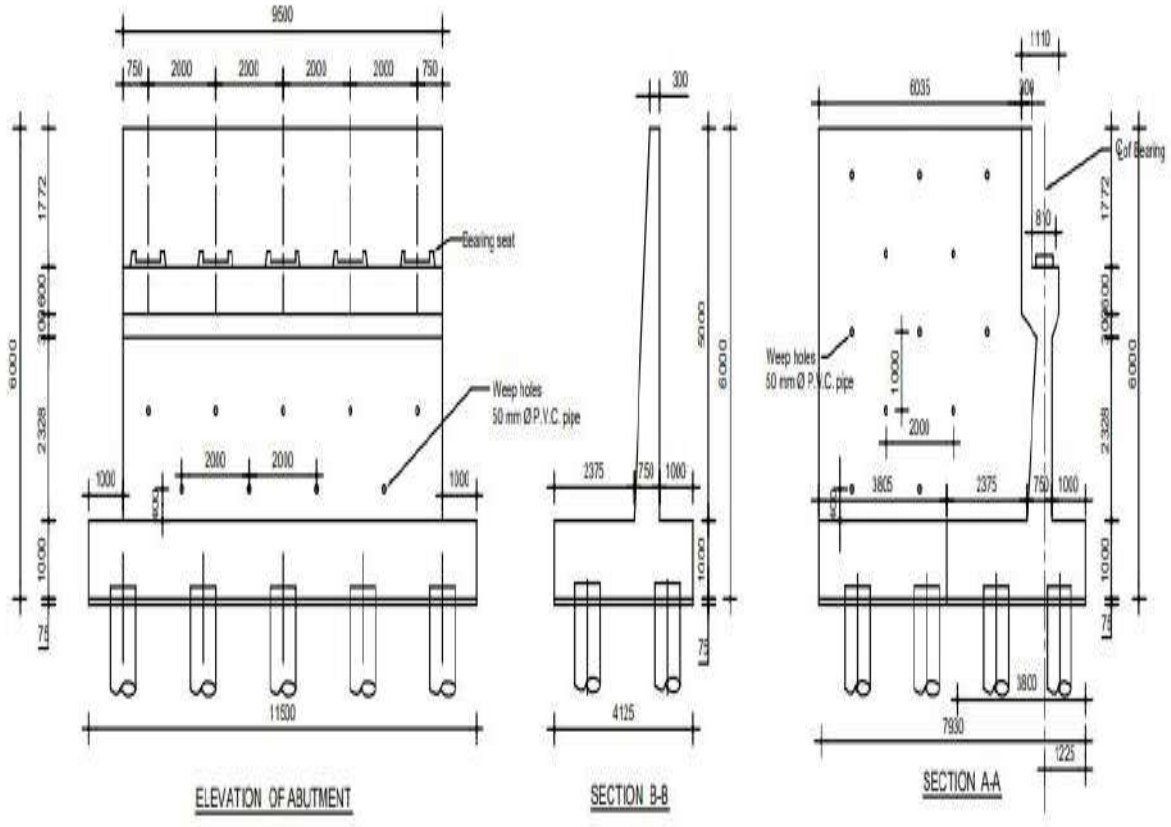

Figure 3-5: Elevation of Abutment

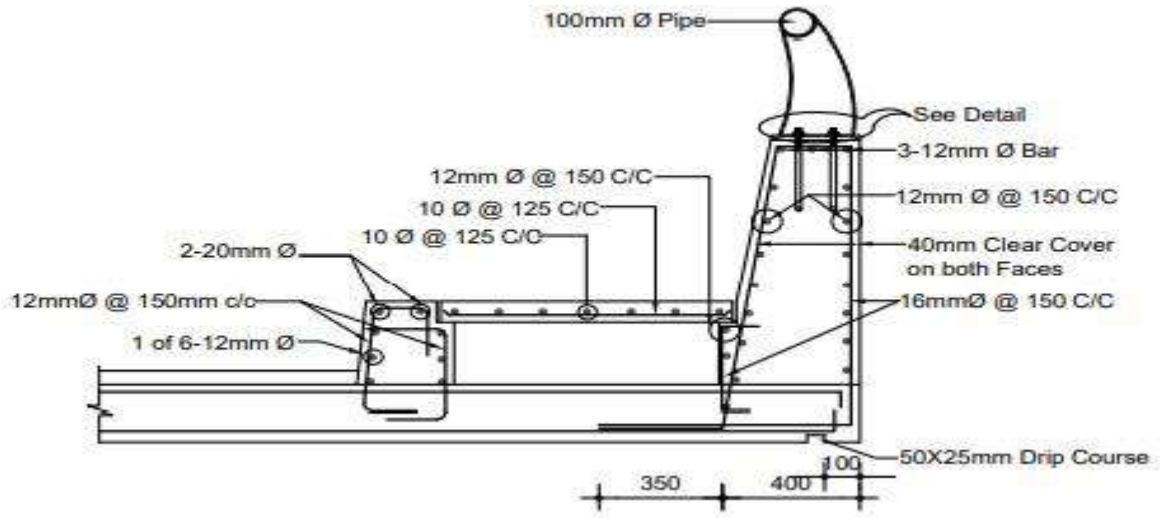

Figure 3-6: Parapet of the proposed bridge

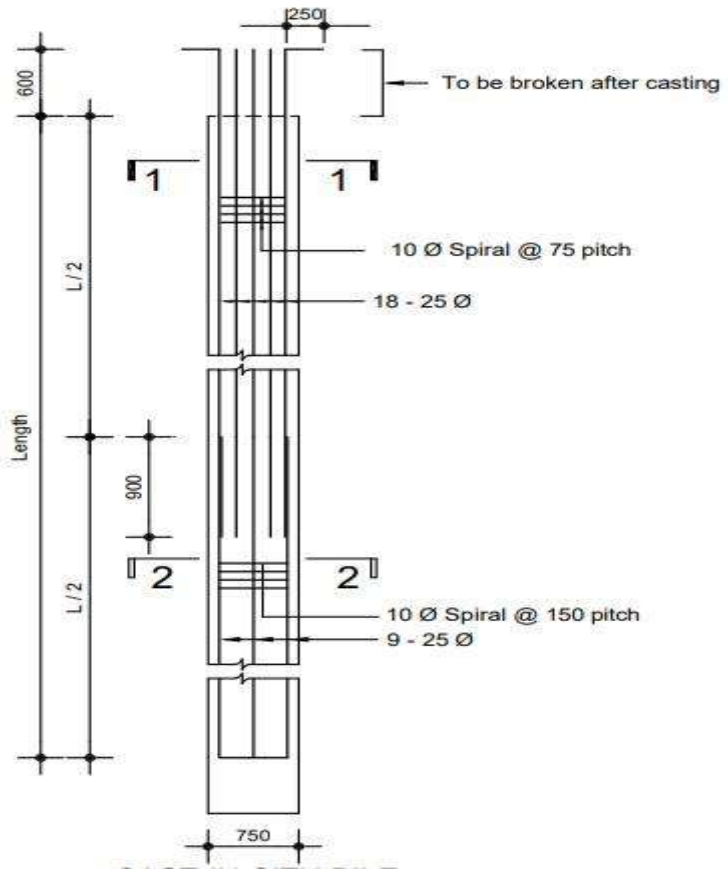

Figure 3-7: Details Cast-In-Situ Pile for abutment

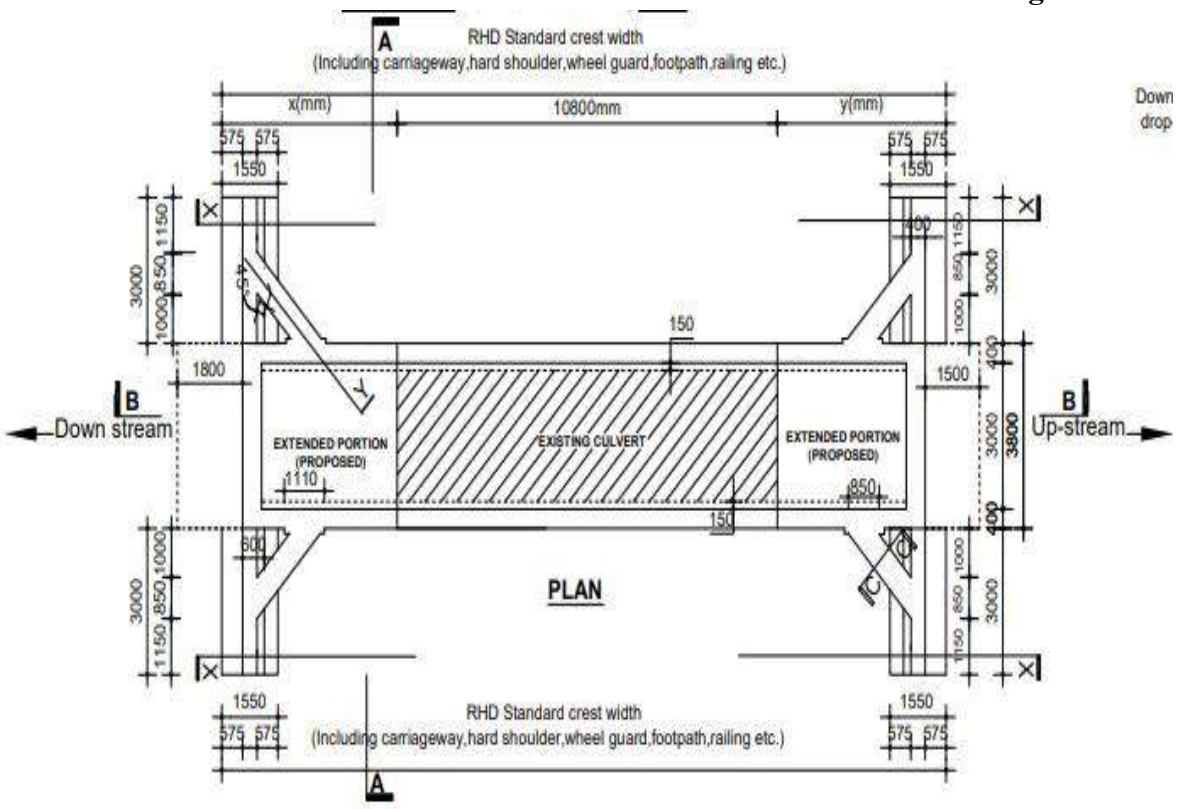

Figure 3-8: Plan view of proposed culvert

3.3.3 Construction of Embankments

The Government of Bangladesh has adopted a policy to encourage construction of roadway embankments with river sand rather than clayey agricultural soil. The widening of the road will require both filling of low land and cutting through the highland in order to achieve a workable grade. The proposed embankment will be constructed with suitable fill material, likely obtained by suction dredging from the nearby rivers crossed by the alignments. Preparation of the road embankment will require the placement of 13,95,168.59 Cum of embankment material (subgrade, sub-base, base course and surface course).

3.3.4 Construction of Pavement

Both flexible and rigid pavements will be constructed in the proposed project. The pavement works comprise construction of sub-grade, sub-base, base course, and surface course (binder course & wearing course). All roads have been designed following road safety requirements as per RHD published guidelines and standards.

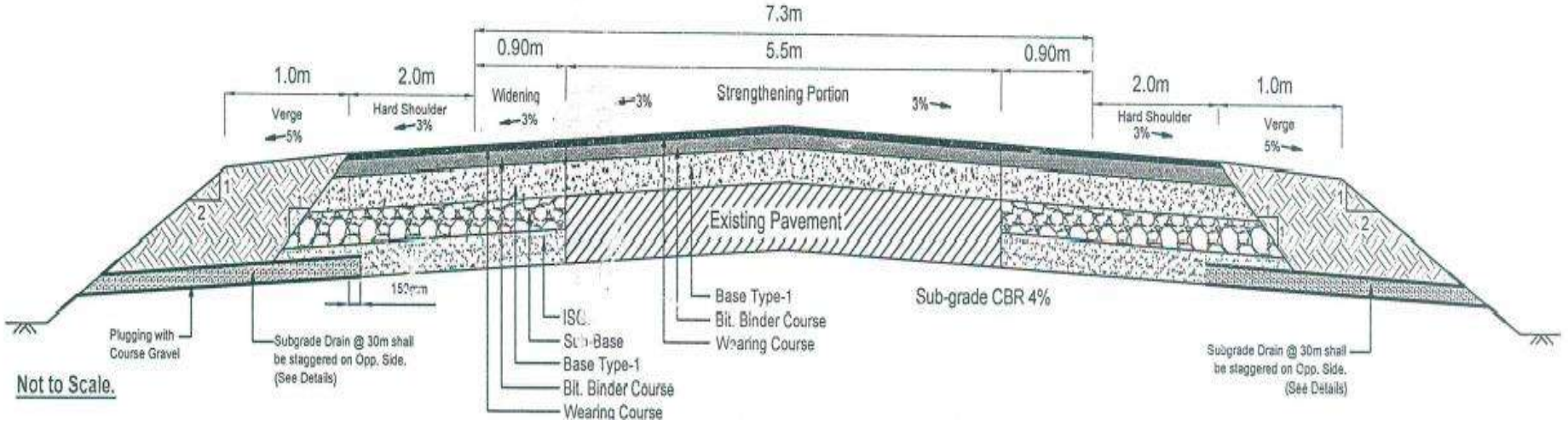

Figure 3-9: Pavement design for strengthening and widening

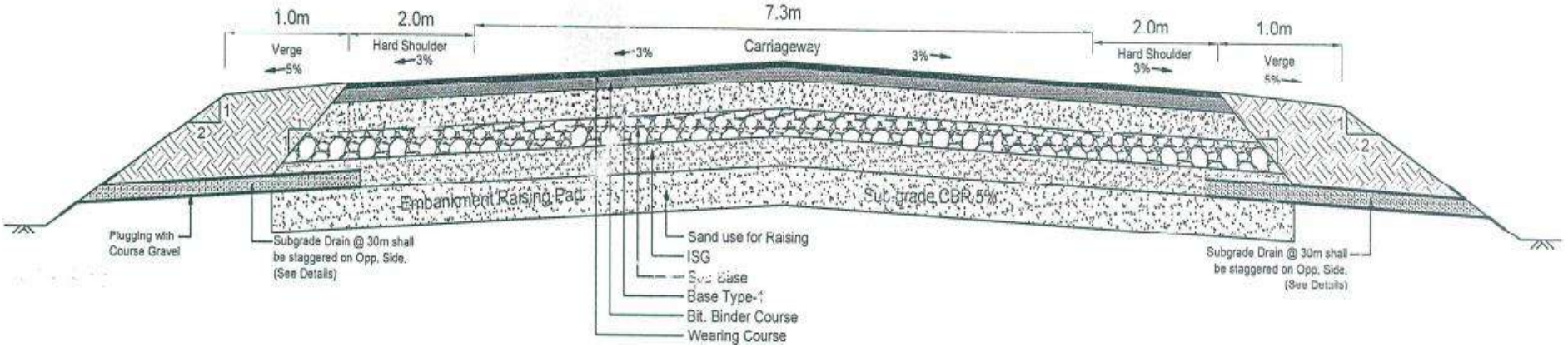

Figure 3-10: Pavement design for raising

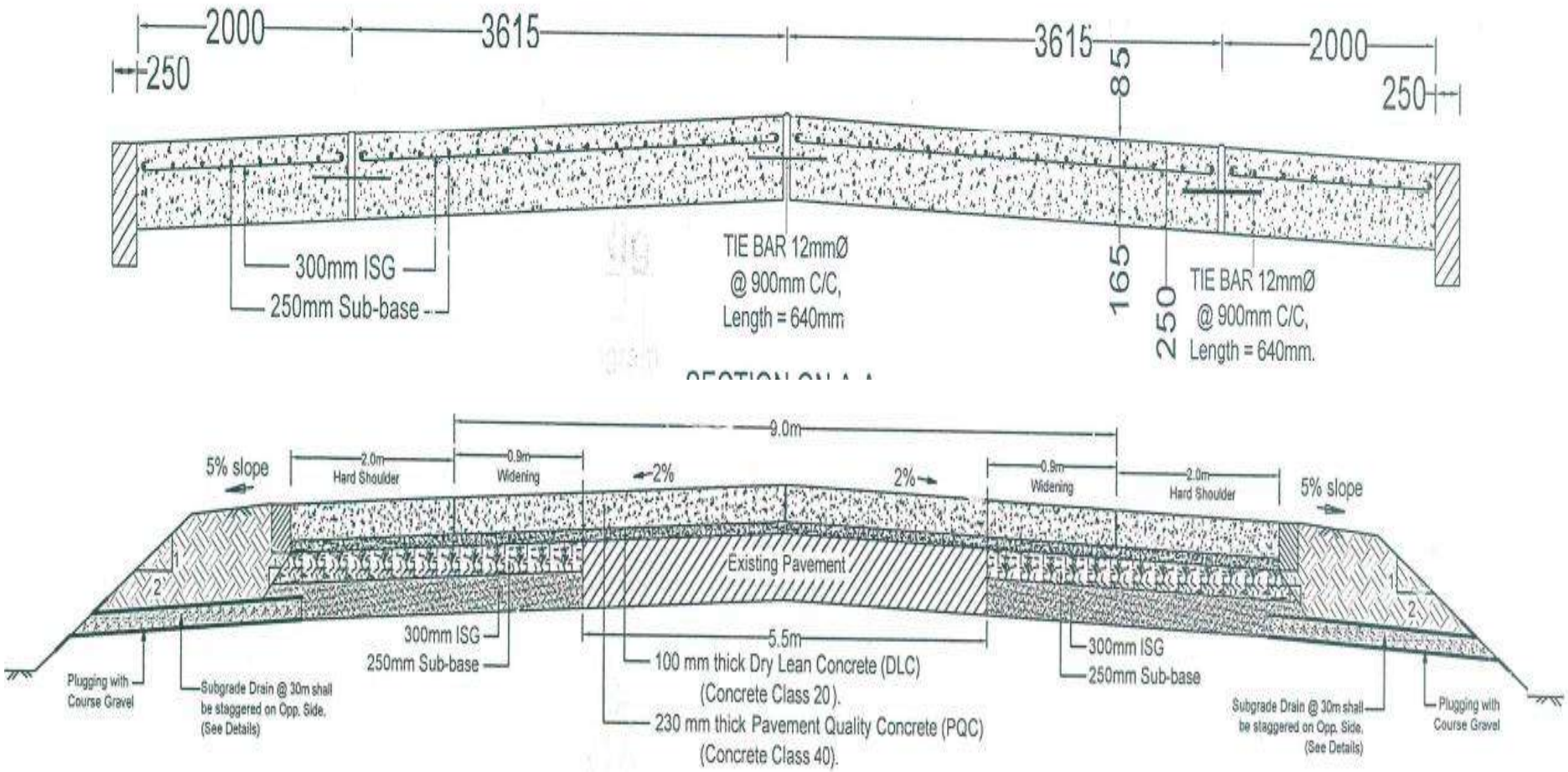
2000
3615
3615
2000
250
250
85
300mm ISG
250mm Sub-base
TIE BAR 12mmØ
@ 900mm C/C,
Length = 640mm
165
250
TIE BAR 12mmØ
@ 900mm C/C,
Length = 640mm.
9.0m
5% slope
2.0m
Hard Shoulder
0.9m
Widening
2%
2%
0.9m
Widening
2.0m
Hard Shoulder
5% slope
Existing Pavement
300mm ISG
250mm Sub-base
5.5m
100 mm thick Dry Lean Concrete (DLC)
(Concrete Class 20).
230 mm thick Pavement Quality Concrete (PQC)
(Concrete Class 40).
300mm ISG
250mm Sub-base
Plugging with
Course Gravel
Subgrade Drain @ 30m shall
be staggered on Opp. Side.
(See Details)
Subgrade Drain @ 30m shall
be staggered on Opp. Side.
(See Details)
Plugging with
Course Gravel

Figure 3-11: Rigid pavement design for the proposed road

3.3.5 Present Traffic

From the present traffic data of the road, it is observed that mostly motorized vehicles travel through the road. Only a few numbers of non-motorized vehicle travel through the road. The Annual Average Daily Traffic (AADT) is 6973 on the both roads.

Table 3-1: Present traffic data of the project area

Traffic	Baraiyerhat (road start, int with N1)- Karerhat (int with Z1031) R 151		Karerhat (int with Z1031)-Heako (Int with R152)	
Motorized	Heavy Truck	0.0	Heavy Truck	0.0
	Medium Truck	206.0	Medium Truck	206.0
	Small Truck	316.0	Small Truck	316.0
	Large Bus	72.0	Large Bus	72.0
	Medium Bus	20.0	Medium Bus	20.0
	Micro Bus	141.0	Micro Bus	141.0
	Utility	32.0	Utility	32.0
	Car	84.0	Car	84.0
	Auto Rickshaw	5394.0	Auto Rickshaw	5394.0
	Motor Cycle	494.0	Motor Cycle	494.0
Non-motorized	Bi-Cycle	178.0	Bi-Cycle	178.0
	Cycle Rickshaw	36.0	Cycle Rickshaw	36.0
	Cart	0.0	Cart	0.0
Total AADT		6973.0		6973.0

3.3.6 Implementation Cost

The project is jointly financed by the Government of Bangladesh (GoB) and the Third Indian Line of Credit (LoC-III), with a total estimated cost of BDT 122,631.63 lakh, comprising BDT 63,224.80 lakh from GoB and BDT 59,406.83 lakh from LoC-III.

3.3.7 Location of the Project

The Widening of Baraiyarhat–Heyako–Ramgarh Road Project involves the improvement and widening of an approximately 38.0 km road corridor, extending from Baraiyarhat (Chainage 0+000), connected to the Dhaka–Chattogram National Highway, to Ramgarh Bazar. The project comprises two road sections: the 20.0 km Baraiyarhat–Heyako–Fatikchhari Road (R-151) and the 18.0 km Heyako–Ramgarh Road (R-152). Of the total road length, approximately 34.750 km falls within Mirsharai and Fatikchhari Upazilas of Chattogram District, while the remaining 3.250 km lies within Ramgarh Upazila of Khagrachhari Hill District. Baraiyarhat Section: 22°53'38.0"N, 91°32'05.1"E; Ramgarh Section: 22°59'58.0"N, 91°44'06.4"E. The existing carriageway width of approximately 5.5 m is being upgraded to

11.3 m. The project corridor is located approximately 72 km from Chattogram City and 201 km from Dhaka.

3.4 Materials Used and Sources for Construction

3.4.1 Concrete Aggregate

Bangladesh is occupying most part of the Bengal Delta having very thick sedimentary cover. Main source of construction aggregates is sedimentary rock but government developed an underground mine (Maddhapara Granite Mine, Dinajpur) for high quality aggregates from igneous rock. Unfortunately, the country fulfills their most demand from imported rock both igneous and sedimentary rock. Stone aggregates from Sylhet quarries are commonly used for the manufacture of normal and high strength concrete. Panchagarh is also a local source of stone aggregate which is located within the project road alignment. Additionally, aggregate of high strength concrete is likely to be imported from India and Bhutan also. A significant amount concrete will be required for the construction of 38 km Baraiyerhat-Heako-Ramgarh road.

3.4.2 Cement and Steel Reinforcement

Bangladesh produces different classes of EN and ASTM standard cement and high strength deformed bar of 40,60 and 75 grades. A significant amount of cement and steel reinforcement will be required for the construction of the proposed road.

3.4.3 Bitumen

Bitumen used for the construction work is usually imported from other countries. Commonly used bitumen in the road construction industry in Bangladesh is 60-70 and 80-100 penetration grade bitumen. For Bangladesh temperature 60-70 grade is better suited but the supply of this grade is limited.

3.4.4 Recycled Pavement Materials

The preliminary design envisages recycling pavement materials by milling the existing asphalt concrete and re-using the product. It is eliminated that total 486134 m^3 existing pavement materials could be used after recycling for the proposed carriageways. This recycled asphalt concrete mixed with unbound base and sub-base materials shall be used in the sub-base or lower base of the new carriageways.

3.5 Project Implementation Schedule

Date of Commencement: 01/07/2020

Date of Completion: 31/12/2026 (approved by ECNEC on 18 August 2020).

CHAPTER 4 BASELINE ENVIRONMENT ASSESSMENT

4.1 Introduction

As part of the Environmental Impact Assessment (EIA) of improvement of road and bridges from Baraiyarhat, Mirsharai Upazila of Chittagong district to Ramgarh Upazila of Khagrachari district, an environmental baseline survey was carried out in project location. The specific objectives of the baseline study were to gather information on the existing physical environment, biological-ecological environment and socio-economic environment; to gather and assess peoples' perception on different aspects of the proposed project in the project area. The baseline survey report provides a detailed description of the existing conditions of physical, biological as well as socio-economic environment of the project area.

This part describes the existing physical environment of areas based on the baseline survey and other primary and secondary studies (e.g., water quality, air and noise level measurements) carried out as a part of the present study. Relevant information on climate, topography and drainage, geology and soils, hydrology and water resources, air quality, noise level, and water quality have been described in this part.

4.2 Physical Environment

4.2.1 Topography

The areas of this project lie 29m above mean sea level and have a south-east ward regional slope. The land has been formed mostly by bedrocks of Dihing Formation and hence the surface geology of this region consists of deposits of Pleistocene and Pilocene period. In the first 5 km area, there are settlement of households. But the rest of the area is fully hilly area. There is some cultivation of trees near the road.



Figure 4-1: Roadside View of Baraiyarghat to Ramgarh Road

4.2.2 Description of River System

The proposed road alignment will be crossed by Hinguli river and it will be adjacent to Feni Rive r near Begum Bazar High School. About 9 number of R.C.C and P.C girder bridges and 23 number of R.C.C box culverts are needed to connect the road and to ensure the flow of water through the river system. A section of Feni River is adjacent to this area and the tide is not so strong to flood the area.



Figure 4-2: Feni and Hinguli river

Beside these two rivers, there are total of 8 Chora (Khal or Jharna) i.g, Korerhat Chora, Lokkhi Chora, Chikon Chora etc. within the study area. So, there are higher potential of water availability. The Feni River originates in South Tripura districts of India and flows through Subroom town and then enters Bangladesh. The river is navigable by small boats as far as Ramgarh about 80 kilometers upstream.

4.3 Physio-Chemical Environment

4.3.1 Climate

Climate is the long-term average of weather, typically averaged over a period of 30 years. Some of the meteorological variables that are commonly measured are temperature, humidity, atmospheric pressure, wind, and precipitation. Humidity, temperature and wind speed are more used and significant for describing a climate of a region. Bangladesh Meteorological Department (BMD) have around 35 stations for measuring these parameters. Ramgarh is an upazila of Khagrachari district and it is under Feni station. Bangladesh is located at the central part within the Asiatic monsoon region where the climate is tropical. Relatively small size of the country and generally low-lying area cause moderate spatial variation of temperature, precipitation, relative humidity, wind speeds and other climatic

variables. However, the climate of Bangladesh exhibits pronounced temporal variability. This is because of the moisture-laden monsoon winds flowing predominantly from the south-west during summer and the comparatively dry and colder north-western winds during winter.

Three seasons are generally recognized: a hot, muggy summer from March to June; a hot, humid and rainy monsoon season from June to November during which more than 60% of the total annual rainfall occurs; and a moderately cold, dry winter from December to February. The beginning of the rainy season varies from year to year; heavy rains may commence anywhere between mid-April to the end of September. Usually, winter season is dry with occasional rains. The early summer season is considered from March-April. During summer, the air becomes hot with very low humidity. Early summer is also dominated by Baisakhi cyclone and rains. Average annual climate data of the Feni district are shown in **Table 4-1**.

Table 4-1: Monthly Averages of Climate Variables of the Project Area

Month	Jan	Feb	Mar	Apr	May	Jun	Jul	Aug	Sep	Oct	Nov	Dec	Avg
Rainfall (mm)	10.7	8.1	22.1	69.3	216.4	477.1	612.6	607.4	348.4	215.4	57.7	23.3	222.38
Wind Speed	4.6	6.05	6.25	5.9	6.35	5.8	6.3	5.45	4.95	4.45	3.9	4.4	5.37
Min. Temperature °C	12.6	12.74	18.16	20	21.45	23.43	24.37	23.99	24.31	22.55	17.68	13.97	19.60
Max. Temperature °C	31.36	32.89	36.36	36.6	36.26	34.47	34.51	34.92	35.57	35.35	34.26	32.16	34.56
Humidity (%)	71.9	66.5	67.3	75.6	78.2	84.6	85.0	85.2	84.5	82.3	76.2	76.1	77.8

Source: Bangladesh Meteorological Department

The project corridor is in the South-West Climatic zone and is characterized by rainfall, in rage of 222.38 mm/year, as well as somewhat mild summers, and cloudy, cool winters. Mean monthly maximum temperature reaches 34.56°C generally in April, and mean monthly minimum temperature may fall below 19.60°C, usually in January. Average humidity is relatively high 77.8%.

Relative Humidity

The spatial and temporal variation of Relative Humidity throughout the year is very low in Bangladesh. In the project area, the relative humidity varies from 66.5% to 85.2%.

Precipitation

The most common form of precipitation throughout the year is rain alone, with a peak on July. Annual rainfall of the area is about 222.38 mm. It is observed that, in the study the lowest amount rainfall occurs between November to March. While long lasting precipitation occur from April to October. Highest rainfall occurs in the month of July about 612.6 mm.

4.3.2 Air Quality

For this project air quality samples were taken before commencement of the project as well as during the construction phase currently going on. Three samples were taken in pre-construction phase and Four samples were taken in the ongoing construction phase.

Ambient air quality samples were collected from the project area, primarily at populated locations and market areas along the proposed alignment. Sampling locations were selected at the nearest sensitive receptors or, where applicable, at a minimum distance of 50 m from the alignment centreline. Each sample was monitored continuously for eight consecutive hours. Field measurements were carried out using Forest Micro Environmental Air Quality Monitoring Station. The monitored parameters included Ozone (O_3), Nitrogen Oxides (NO_x), Carbon Monoxide (CO), Carbon Dioxide (CO_2), Sulphur Dioxide (SO_2), Suspended Particulate Matter (SPM), and particulate matter concentrations (PM_{10} and $PM_{2.5}$).

Pre-Construction Stage



Bagan Bazaar, Fotikchori



Baraiyarhat Bazar

Ongoing Construction Stage





Baraiyarhat Bazar, Baraiyarhat Paurashava, Ward-03, Mirsharai, Chattogram



Madartoli, Union: Baganbazar, Ward-06, Mirsharai, Chattogram



Ramghar bazar, Ramghar Paurashava, Ward-09, Khagrachari

Figure 4-3: Air Sample Monitoring Locations

Table 4-2: Monitoring Stations (Ongoing Pre-Construction Phase)

Station	Station ID	GPS Coordinates	Date	Duration
AQ1	Korerhat Road, Mirsorai, Chittagong	22°54'06.8"N; 91°32'24.7"E	22/03/2022	8 hours
AQ2	Bagan Bazar, Fotikchori, Chittagong	22°58'52.3"N; 91°42'24.7"E	23/03/2022	8 hours
AQ3	Yeako Bazar, Bhujpur, Chittagong	22°53'41.5"N; 91°40'38.1"E	23/03/2022	8 hours

Table 4-3: Monitoring Stations (During Ongoing Construction Phase)

Station ID	Station Location Name	Latitude and Longitude	Date	Duration
AQS 1	Baraiyarhat Bazar, Baraiyarhat Paurashava, Ward-03, Mirsharai, Chattogram	22°53'41.8"N 91°32'11.1"E	4th October 2026	8 hours
AQS 2	Madartoli, Union: Baganbazar, Ward-06, Fotikchori, Chattogram	22°55'18.9"N 91°40'32.6"E	5th October 2026	8 hours
AQS 3	Ramghar bazar, Ramghar Paurashava, Ward-09, Khagrachari	22°59'56.4"N 91°44'06.8"E	5th October 2026	8 hours
AQS 4	Koylar Mukh BGB Camp, Union: Kararhat, Mirsharai, Chattogram	22°55'22.3"N 91°36'25.4"E	5-6th October 2026	8 hours

Table 4-4: Ambient Air Quality Analysis Result

(During Pre-Construction Phase)

SN	Parameters	Method	Test Duration (Minutes)	Unit	AQ1	AQ2	AQ3	DoE, Std.	IFC/WB Std.
1	$PM_{2.5}$	Gravimetric	1440	µg/m3	59.28	53.85	64.18	65[a]	75[a]
2	PM_{10}	Gravimetric	1440	µg/m3	90.38	85.88	91.07	150[a]	150[a]
3	SPM	Gravimetric	480	µg/m3	164.86	159.36	179.0	200[b]	NF
4	SO_2	West-Geake	1440	µg/m3	21.82	16.93	17.37	365[a]	125[a]

5	NO_X	Jacob and Hochheiser	1440	µg/m3	46.59	40.44	31.18	100[b]	200[d]
6	CO	CO Sensor	480	ppm	2	1	1	9[c]	NF
7	O_3	O_3 Sensor	480	µg/m3	53	28	67	157[c]	160[c]

*(NF – not found, DoE – Department of Environment.), *1-hour standard Not Found, a= standard for 24 hours exposure, b= standard for yearly exposure, c= standard for 8 hours exposure)*

(During Ongoing Construction Phase)

SL. No.	Parameters	Method	Test Duration (h)	Unit	Concentration				DoE Standards	IFC/WB Standards
					AQS 1	AQS 2	AQS 3	AQS 4		
1	**$PM_{2.5}$**	Optical Laser scattering sensors	8	µg/m³	63.5	47	60.5	64.89	65[a]	75[a]
2	**PM_{10}**	Optical Laser scattering sensors	8	µg/m³	102.38	69	107.75	115.38	150[a]	150[a]
3	**SPM**	Optical Laser scattering sensors	8	µg/m³	243.13	235	247.5	245	NS	NS
4	**SO_2**	Electrochemical Gas Sensors	8	µg/m³	2.59	2.02	2.65	3.15	80[a]	125[a]
5	**NO_x**	Electrochemical Gas Sensors	8	µg/m³	20.25	15.65	19.40	17.93	80[a]	200[c]
6	**CO**	Electrochemical Gas Sensors	8	mg/m³	1.62	1.39	1.74	2.62	5[b]	NS
7	**O_3**	Electrochemical Gas Sensors	8	µg/m³	38.57	36.87	39.87	42.53	100[b]	160[b]
8	**CO_2**	Non-dispersive Infra-red sensors	8	mg/m³	947.5	944.5	975.13	992.5	NS	NS

AQS1-AQS4 = Assigned Station ID, (NS - Not Set, DoE - Department of Environment; IFC - International Finance Corporation; WB - The World Bank; a = standard for 24 hours exposure, b = standard for 8 hours exposure, c = standard for 1-hour exposure

Comment

The comparative assessment indicates an increase in particulate matter concentrations, particularly SPM and PM_{10}, during the ongoing construction phase, potentially reflecting the influence of construction activities. Although $PM_{2.5}$ and PM_{10} concentrations remained within the applicable standards, the elevated SPM levels warrant attention. In contrast, SO_2, NO_x and O_3 concentrations decreased during the construction phase. Accordingly, the Contractor shall continue implementing effective dust control measures, including regular water sprinkling on exposed surfaces and unpaved roads, covering vehicles transporting construction materials, proper storage of fine materials, regular maintenance of construction equipment and vehicles, and enforcement of speed limits within construction areas. Particular attention shall be given to controlling dust-generating activities near sensitive receptors, including residential areas, educational institutions and marketplaces.

4.3.3 Surface Water Quality

For this project surface water samples were collected before commencement of the project as well as during the construction phase currently going on. Two samples were collected in the pre-construction phase from the Feni River and the Hinguli River, and two samples were collected in the ongoing construction phase from the same two rivers at the points where the road alignment crosses or runs adjacent to them (Hinguli River at Baraiyarhat and Feni River at Darogapara, Ramgarh).

Surface water samples were collected following the standard grab-sampling method from the flowing section of each river, preserved in pre-cleaned sample bottles and transported to the Water Quality Testing Laboratory (WQTL) of NGO Forum for Public Health, Dhaka for analysis. The analysed parameters included pH, Turbidity, Conductivity, Total Dissolved Solids (TDS), Total Suspended Solids (TSS), Dissolved Oxygen (DO), BOD_5 20ºC, COD, Nitrate, Sulphate, Phosphate and Chloride. The results were compared with the Drinking Water Quality Standard of Bangladesh (ECR'2023)

Table 4-5: Surface Water Sample Collection Points (Pre-Construction Phase)

Sample ID	Location	Date
SW1	Feni River, Fotikchori, Chattogram	27/03/2021
SW2	Hinguli River, Mirsharai, Chattogram	27/03/2021

Table 4-6: Surface Water Sample Collection Points (During Ongoing Construction Phase)

Station ID	Source	Station Location Name	Date
SWS 1	Hinguli River	Ward-08, Baraiyarhat Paurashava, Mirsharai, Chattogram	06/10/26
SWS 2	Feni River	Village: Darogapara, Ward-09, Ramgarh Paurashava, Ramgarh, Khagrachhari	06/10/26

Table 4-7: Surface Water Quality Analysis Result

(During Pre-Construction Phase)

Sl. No.	Parameters	Units	SW1 (Feni River)	SW2 (Hinguli River)	Drinking Water Quality Standard (ECR'2023-Bangladesh)
1	pH	-	7.2	6.9	6.5-8.5
2	Turbidity	NTU	<1	<1	5.0
3	TDS	mg/L	111	130	1,000
4	DO	mg/L	5.7	5.8	6
5	Nitrate	mg/L	22.88	4.2	45
6	Chloride	mg/L	<60	<60	150-600
7	Phosphate	mg/L	0.1	0.1	6
8	Sulphate	mg/L	<1	<1	400
9	TSS	mg/L	<2	<2	10

Sl. No.	Parameters	Units	SW1 (Feni River)	SW2 (Hinguli River)	Drinking Water Quality Standard (ECR'2023-Bangladesh)
10	COD	mg/L	2.7	1.3	-
11	BOD_5 20ºC	mg/L	0.3	0.2	0.2
12	Conductivity	µS/cm	218	257	-

(During Ongoing Construction Phase)

Sl. No.	Parameters	Units	SWS 1 (Hinguli River)	SWS 2 (Feni River)	Drinking Water Quality Standard (ECR'2023-Bangladesh)
1	pH	-	7.3	7.2	6.5-8.5
2	Turbidity	NTU	2.8	2.1	5.0
3	TDS	mg/L	130	80	1,000
4	DO	mg/L	5.8	6.0	6
5	Nitrate	mg/L	8.5	6.2	45
6	Chloride	mg/L	61	<60	150-600
7	Phosphate	mg/L	0.008	0.1	6
8	Sulphate	mg/L	3.0	5.0	400
9	TSS	mg/L	<2	<2	10
10	COD	mg/L	5.6	3.7	-
11	BOD_5 20ºC	mg/L	1.2	0.8	0.2
12	Conductivity	µS/cm	260	160	-

*SWS1-SWS2 = Assigned Station ID; ECR = Environment Conservation Rules; the DO standard is a minimum value; * as reported by the laboratory (ECR'2023 range 150-600 mg/L). Source: Water Quality Testing Laboratory, NGO Forum for Public Health (Report Ref. WQTL/209-426/26, dated 14 October 2026).*

Comment

The comparative assessment indicates that pH, TDS, TSS, Conductivity, Nitrate, Sulphate, Phosphate and Chloride remained within the applicable drinking water quality standards in both rivers during the ongoing construction phase. BOD_5 20ºC exceeded the standard in both rivers (1.2 mg/L in the Hinguli River and 0.8 mg/L in the Feni River against the standard of 0.2 mg/L), and both BOD_5 and COD values increased in comparison with the pre-construction phase (BOD_5 from 0.2 to 1.2 mg/L and COD from 1.3 to 5.6 mg/L in the Hinguli River; BOD_5 from 0.3 to 0.8 mg/L and COD from 2.7 to 3.7 mg/L in the Feni River). Turbidity also increased from <1 NTU to 2.1-2.8 NTU, although it remained within the standard, and DO in the Hinguli River (5.8 mg/L) was marginally below the minimum value of 6 mg/L. The increase in organic load and turbidity may partly reflect the influence of earthwork, spoil handling and runoff from the construction sites near the river crossings, together with the discharge of domestic waste from the adjacent bazaar areas. Accordingly, the Contractor shall ensure that no excavated material, construction debris, bitumen or fuel is dumped or washed into the rivers or their tributary channels; silt fences, sediment traps and bunds shall be provided at work sites adjacent to watercourses; washing of vehicles and

equipment in or near the rivers shall be prohibited; sanitation facilities at the labour camps shall be maintained properly; and periodic monitoring of surface water quality shall be continued to verify compliance with the applicable standards.

4.3.4 Ground Water Quality

For this project groundwater samples were collected from tube wells before commencement of the project as well as during the construction phase currently going on. Two tube well samples were collected in the pre-construction phase from Fotikchori and Mirsharai, and three tube well samples were collected in the ongoing construction phase from Karerhat, Heyako and Sonaipul (Ramgarh). The tube wells were selected considering the geographical position and hydrogeological continuity of the locations so as to represent the project area along the alignment.

Groundwater samples were collected from the selected tube wells following the standard method of sampling after purging the wells, and were transported to the Water Quality Testing Laboratory (WQTL) of NGO Forum for Public Health, Dhaka for analysis. The samples of the ongoing construction phase were received by the laboratory on 6 October 2026 and the test report was issued on 14 October 2026 (WQTL Code: D-428). The analysed parameters included pH, Turbidity, Hardness, Iron, Manganese, Arsenic, Chloride, Total Coliform (TC) and Faecal Coliform (FC). The results were compared with the Drinking Water Quality Standard of Bangladesh (ECR'2023).

Table 4-8: Ground Water Sample Collection Points (Pre-Construction Phase)

Sample ID	Source	Location	Date
GW1	Tube well	Fotikchori, Chattogram	27/03/2021
GW2	Tube well	Mirsharai, Chattogram	27/03/2021

Table 4-9: Ground Water Sample Collection Points (During Ongoing Construction Phase)

Station ID	Source	Station Location Name	Date
GWS 1	Tube well	Village: Karerhat, Ward-02, Union: Karerhat, Mirsharai, Chattogram	06/10/26
GWS 2	Tube well	Village: Heyako, Ward-02, Union: Datmara, Fotikchori, Chattogram	06/10/26
GWS 3	Tube well	Village: Sonaipul, Ward-08, Ramgarh Paurashava, Ramgarh, Khagrachhari	06/10/26

Table 4-10: Ground Water Quality Analysis Result

(During Pre-Construction Phase)

Sl. No.	Parameters	Units	GW1 (Fotikchori)	GW2 (Mirsharai)	Drinking Water Quality Standard (ECR'2023-Bangladesh)
1	pH	-	6.9	6.7	6.5-8.5
2	Turbidity	NTU	<1	85	5

Sl. No.	Parameters	Units	GW1 (Fotikchori)	GW2 (Mirsharai)	Drinking Water Quality Standard (ECR'2023-Bangladesh)
3	Hardness	mg/L	32	124	500
4	Iron	mg/L	4.48	9.78	1.0
5	Manganese	mg/L	0.25	0.1	0.4
6	Arsenic	mg/L	<0.003	<0.003	0.05
7	Chloride	mg/L	<60	<60	250*
8	TC	#/100 mL	6	0	0
9	FC	#/100 mL	1	0	0
10	Salinity	mg/L	<100	<100	1,650

(During Ongoing Construction Phase)

Sl. No.	Parameters	Units	GWS 1 (Karerhat)	GWS 2 (Heyako)	GWS 3 (Sonaipul)	Drinking Water Quality Standard (ECR'2023-Bangladesh)
1	pH	-	7.3	7.4	7.3	6.5-8.5
2	Turbidity	NTU	1.1	<1	<1	5
3	Hardness	mg/L	64	70	60.2	500
4	Iron	mg/L	0.51	<0.05	<0.05	1.0
5	Manganese	mg/L	0.2	0.25	0.1	0.4
6	Arsenic	mg/L	0.008	0.009	0.004	0.05
7	Chloride	mg/L	<60	<60	<60	250*
8	TC	#/100 mL	0	0	0	0
9	FC	#/100 mL	0	0	0	0

*GWS1-GWS3 = Assigned Station ID; TC = Total Coliform; FC = Fecal Coliform; * as reported by the laboratory (ECR'2023 range 150-600 mg/L). Source: Water Quality Testing Laboratory, NGO Forum for Public Health (Report Ref. WQTL/209-426/26, dated 14 October 2026).*

Comment

The comparative assessment indicates that all analyzed groundwater parameters at the three tube wells remained within the drinking water quality standards (ECR'2023) during the ongoing construction phase. Total and fecal coliforms were absent in all samples, arsenic (0.004–0.009 mg/L), iron (<0.05–0.51 mg/L) and manganese (0.1–0.25 mg/L) were well below their respective limits, and turbidity did not exceed 1.1 NTU. In contrast, the pre-construction samples showed exceedances of turbidity (85 NTU at Mirsharai), iron (4.48 and 9.78 mg/L at both locations) and total and fecal coliforms (6 and 1 per 100 mL at Fotikchori). Since the two phases sampled different tube wells, this difference reflects natural variability of the shallow aquifer rather than an improvement attributable to the project; nevertheless, the results confirm that construction activities have not deteriorated groundwater quality to date. The Contractor shall continue to protect tube wells near the work sites from damage and surface runoff, store fuel, bitumen and chemicals on bunded impervious surfaces away

from water points, maintain proper sanitation at labour camps and yards, and continue periodic groundwater monitoring during the remaining construction period.

4.3.5 Ambient Noise Level

As a part of the baseline study, noise level measurements were instantly carried out at the proposed project location by Lurton Noise Level Meter. At each location noise data is taken for 15 minutes during both day and night separately. At the time of measurement, whenever there is an interfering effect like mike noise, human voice from house and bazaar, vehicular sound, sound of machine and tool from workshop etc. are also recorded. The noise level was taken at 12 points of study area during pre-construction stage from 10 points during the ongoing construction stage. At each location multiple readings were taken over a short period of time (both night & day) to calculate the Leq value.

Pre-Construction Stage





Bagan Bazar, Fotikchori

Ongoing Construction Stage





Baraiyarhat Bazar, Baraiyarhat Paurashava, Ward-03, Mirsharai, Chattogram



Madartoli, Union: Baganbazar, Ward-06, Mirsharai, Chattogram



Ramghar bazar, Ramghar Paurashava, Ward-09, Khagrachari

Figure 4-4: Noise Level Monitoring Station

Table 4-11: Monitoring Stations

(Pre-Construction Stage)

Station ID	Station	Date	GPS Coordinates
NQ1	Korerhat Road, Mirsorai, Chittagong	22/03/2022 & 23/03/2022	22°54'06.8"N, 91°32'24.7"E
NQ2	East Hinguli, Mirsorai, Chittagong		22°54'03.2"N, 91°32'40.9"E
NQ3	Baroiyarhat Pouro Shova, Chittagong		22°53'39.2"N, 91°32'06.3"E
NQ4	Bagan Bazar, Fotikchori, Chittagong		22°58'52.3"N, 91°42'24.7"E
NQ5	Mohamoni, Ramgor, Chittagong		22°59'35.5"N, 91°43'28.8"E
NQ6	Baghmara, Bhujpur, Fotikchuri, Chittagong		22°57'29.6"N, 91°41'20.5"E
NQ7	Cikonchora, Fotikchora, Chittagong		22°56'59.6"N, 91°40'58.2"E
NQ8	Taltola, Ramgarh, Chittagong		22°57'51.5"N, 91°41'59.7"E
NQ9	Yeako Bazar, Bhujpur, Chittagong		22°53'41.5"N, 91°40'38.1"E
NQ10	Kalopani Bazar, Chittagong		22°55'11.3"N, 91°36'58.0"E
NQ11	Koyla Bazar, Jorargonj, Chittagong		22°54'11.7"N, 91°37'47.1"E
NQ12	Islampur, Bhujpur, Chittagong		22°56'36.0"N, 91°40'30.3"E

(Ongoing Construction Stage)

Station ID	Station Location Name	Latitude and Longitude	Date
NS 1	Baraiyarhat Bazar, Baraiyarhat Paurashava, Ward-03, Mirsharai, Chattogram	22°53'41.91"N 91°32'11.43"E	4th-5th October 2026
NS 2	Madartoli, Union: Baganbazar, Ward-06, Fotikchori, Chattogram	22°55'18.83"N 91°40'32.57"E	4th-5th October 2026
NS 3	Ramghar bazar, Ramghar Paurashava, Ward-09, Khagrachari	22°59'56.56"N 91°44'6.72"E	4th-5th October 2026
NS 4	Bagan bazar, Union: Bagan bazad, Ward-01, Fotikchori, Chattogram	22°58'52.4"N 91°42'25.0"E	4th-5thOctober 2026
NS 5	Bagmara, Union: Bagan bazar, Ward-04, Fotikchori, Chattogram	22°57'33.4"N 91°41'23.4"E	5th October 2026
NS 6	Heyako, Union: Datmara Ward-2, Fotikchori, Chattogram	22°53'29.6"N 91°40'17.3"E	5th October 2026
NS 7	Koyla, Union: Kararhat, Ward-06, Mirsharai, Chattogram	22°54'09.5"N 91°38'00.0"E	5th October 2026
NS 8	KoylaR Mukh BGB Camp, Union: Kararhat, Mirsharai, Chattogram	22°55'22.39"N 91°36'25.14"E	5th October 2026
NS 9	Forest office, Union: Kararhat, Ward-05	22°55'33.7"N 91°34'39.9"E	5th October 2026
NS 10	Hinguli more, Union: Kararhati, Ward-02, Mirsharai, Chattogram	22°55'09.5"N 91°33'01.9"E	5th October 2026

Table 4-12: Noise Level Monitoring Data

(Pre-Construction Stage)

SN	Station ID.	Site Condition	Receptor Type	Concentration present (Leq) dBA					
				Day Time			Night Time		
				Min.	Max.	L_{eq}	Min.	Max.	L_{eq}
1	NQ1	Preconstruction Phase	Commercial	58.2	66.7	63.4	48.2	55.4	52.1
2	NQ2		Residential	51.1	57.3	57.3	43.2	49.7	46.3
3	NQ3		Commercial	51.1	58.4	58.4	50.0	57.7	54.0
4	NQ4		Commercial	51.2	55.6	55.6	46.2	48.1	47.1
5	NQ5		Mixed	52.8	61.3	61.3	44.2	57.4	54.3
6	NQ6		Commercial	55.3	65.9	65.9	47.6	57.1	54.6
7	NQ7		Residential	49.1	59.2	59.2	51.3	53.7	51.8
8	NQ8		Residential	50.1	53.2	53.2	47.1	49.3	48.2
9	NQ9		Commercial	52.9	56.6	56.6	49.8	52.3	50.5
10	NQ10		Mixed	56.2	62.9	62.9	48.1	58.2	53.0
11	NQ11		Commercial	57.6	60.3	60.3	51.2	59.1	54.6
12	NQ12		Residential	55.2	61.0	61.0	47.1	55.8	52.8
DoE (Bangladesh) Standard for Residential Area				50			40		
DoE (Bangladesh) Standard for Commercial Area				70			60		
DoE (Bangladesh) Standard for Mixed Area				60			50		

IFC/International Standard for Industrial/Commercial Zone	70	70
IFC/International Standard for Residential area	55	45

**** Max= Maximum Value, Min= Minimum Value, Avg= Average Leq Value, DoE= Department of Environment, IFC= International Finance Corporation, WB= World Bank, dBA= Noise Level Unit*

(Ongoing Construction Stage)

Sample ID	Receptor Type	Concentration present (LAeq) dBA					
		Day Time			Night Time		
		Max.	Min.	Leq	Max.	Min.	Leq
NS 1	Commercial Area	72.7	54.4	65.7	60.6	45.2	53.4
NS 2	Mixed Area	62.9	45.7	56	49.8	35.3	44.7
NS 3	Commercial Area	77.2	54.3	67.6	49.1	35.7	44.4
NS 4	Commercial Area	72.5	54.5	66.6	46.5	35.2	42.5
NS 5	Residential area	62.2	45.1	54.9	42.8	34.2	38.7
NS 6	Commercial Area	72.7	52.7	67.8	43.3	32.9	39.3
NS 7	Silence Area	63.3	35.7	49.9	44.2	34.4	38.9
NS 8	Mixed Area	62.9	45.2	57.3	49.6	35.5	43.8
NS 9	Silence Area	61.1	33.1	49.3	43.1	32.2	39.2
NS 10	Mixed Area	68.6	44.1	59.2	44.9	31.3	38.9
DoE (Bangladesh) Standard for Commercial Area		70			60		
DoE (Bangladesh) Standard for Residential Area		55			45		
DoE (Bangladesh) Standard for Mixed Area		60			50		
DoE (Bangladesh) Standard for Silence Zone		50			40		
IFC/International Standard for Industrial/Commercial Zone		70			70		
IFC/International Standard for Residential area		55			45		

Comment

The comparative assessment indicates that average daytime noise levels remained relatively stable between the two monitoring stages, while average nighttime noise levels decreased during the ongoing construction stage. Although the maximum daytime Leq increased slightly, all recorded noise levels during the ongoing construction stage remained within the applicable DoE and IFC/WB standards for the respective receptor categories. The exceedances recorded during the pre-construction stage in residential and mixed-use areas indicate pre-existing ambient noise pressures in these locations.

The Contractor shall continue implementing appropriate noise mitigation measures throughout the remaining construction period, including regular maintenance of construction equipment and vehicles, installation of noise barriers where necessary, restriction of unnecessary horn use, and scheduling of noise-intensive activities during daytime hours. Particular attention shall be given to construction activities near residential areas, educational institutions and other sensitive receptors. Periodic noise monitoring shall also be continued

to verify compliance with applicable standards and minimize noise-related disturbances to nearby communities.

4.4 Geology and Seismicity

4.4.1 Soil Characteristics

The soil formation in Bangladesh is remarkably homogeneous in appearance, both vertically and laterally. It comprises layer of unconsolidated clay, about 10m thick near Dhaka, but apparently thinner to the east and possibly much thicker in the west. The soil of Bangladesh can broadly be classified into seven tracts: (1) Madhupur Tract or Red Soil Tract, (2) Barind Tract, (3) Teesta Silt, (4) Brahmaputra Alluvium, (5) Gangetic Alluvium, (6) Coastal Saline Tract, and (7) Hill Tracts.

Khagrachari is located in the region of brown hilly soil deposits. These soils are brown and red-mottled, strong to extremely acidic, friable clay loam to clay soils over deeply weathered, red-mottled, Madhupur clay. The soil type of the project area consists brown hill soils, bedrocks of Dihing Formation (Pleistocene and Pilocene) and Tipam Sandstone (Neogene).

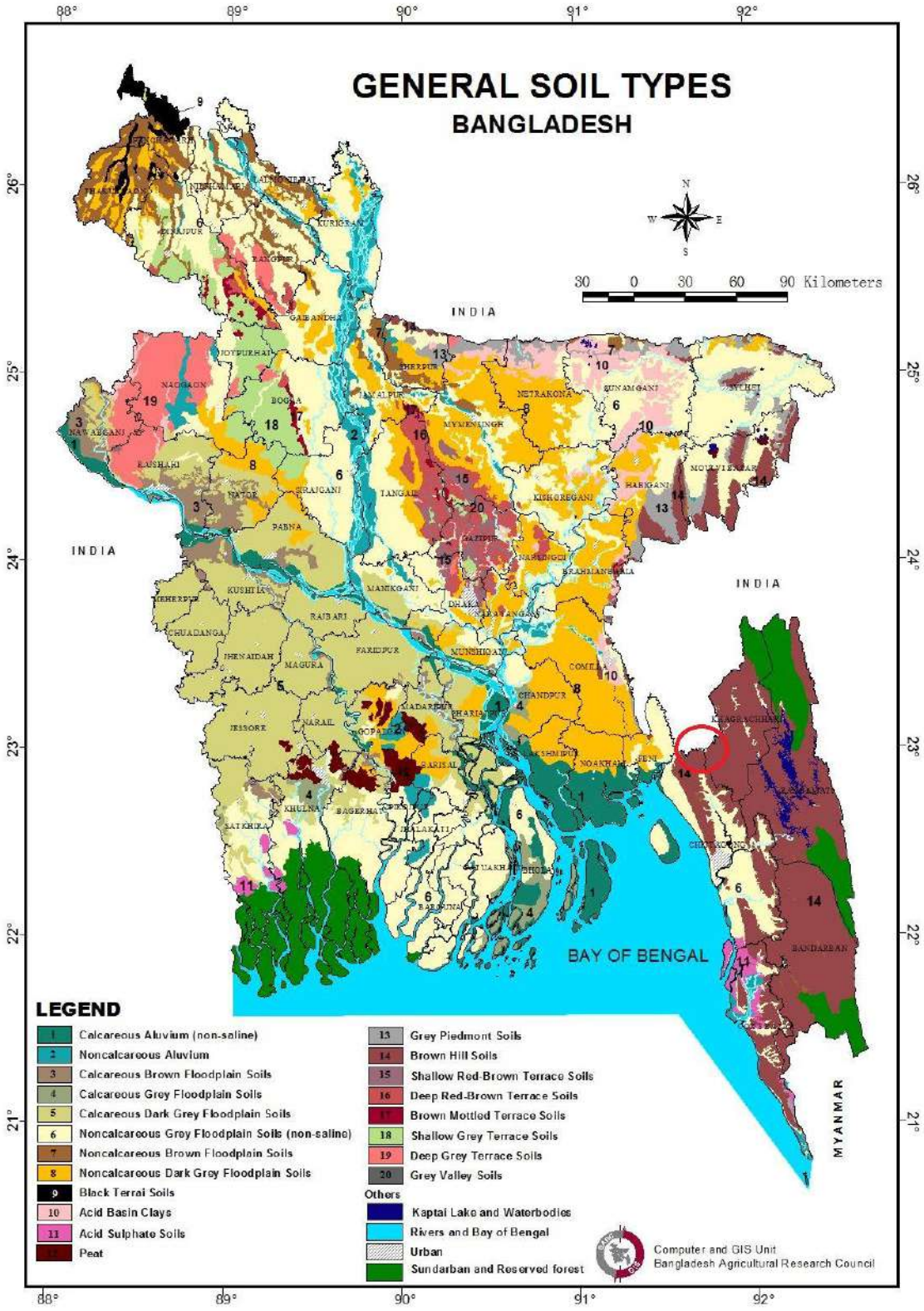

Figure 4-5: General Soil Type Map of Bangladesh

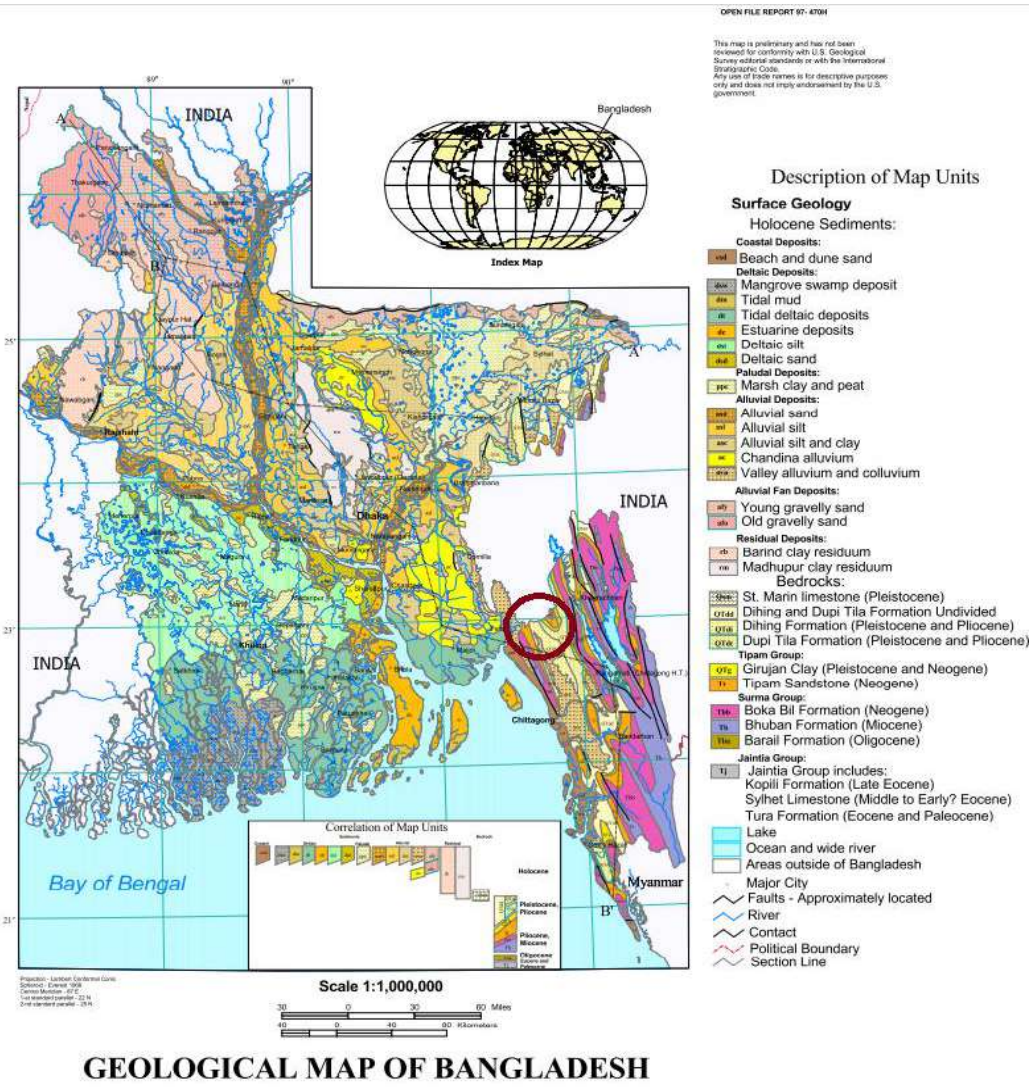

Figure 4-6: Geological Map of Bangladesh

4.4.2 Seismicity

As Bangladesh is located close to the boundary of two active plates (Indian plate in the west and Eurasian plate in the east and north) the country has always been under threat of an earthquake that might be so catastrophic it will kill people in less than a minute (**Figure 4-7**). In the immediate outside of the eastern frontier of Bangladesh, Eurasian and Indian Plate boundary exist while within the country; three major fault lines-Madhupur fault, Dauki fault and Eastern Plate boundary fault are located.

In the last two hundred and fifty years, Bangladesh has experienced eight major strong ground motion (magnitude over 7.0), of which, epicenter of two earthquakes (Srimongal Earthquake of 1918, and Bengal of 1885) were located within the country. Due to the existences of geological plate boundary and fault lines, occurrences of historical damaging earthquakes in and around the country and long-term silences of happening potential earthquake (seismic-gap) across the region, possibility of occurring strong earthquake is increasing over the time period. Since it is not possible to predict earthquake, awareness

(what to do) with regard to these devastating phenomena can save the live and livelihood to a great extent of the dwellers living at risk. For the conceptual designs in this project, care will be taken to consider the seismic effects.

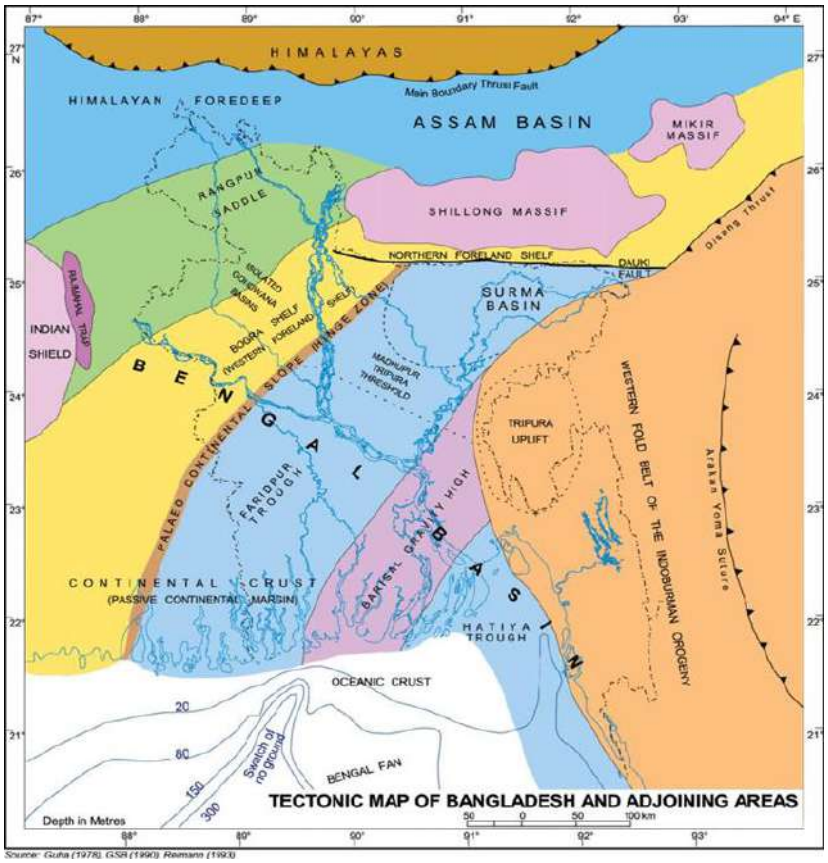

Figure 4-7: Tectonic Map of Bangladesh

With the frequency of earthquakes on the rise, it is natural for people to be scared as experts consider them to be advance warning of what lies ahead. And with tremors in the region increasing in frequency, experts believe a major one can be expected any day. Bangladesh can be divided into four main earthquake zones following BNBC 2017 (**Figure 4-8**). The intent of the seismic zoning map is to give an indication of the Maximum Considered Earthquake (MCE) motion at different parts of the country. The MCE motion may be considered to correspond to having a 2% probability of exceedance within a period of 50 years.

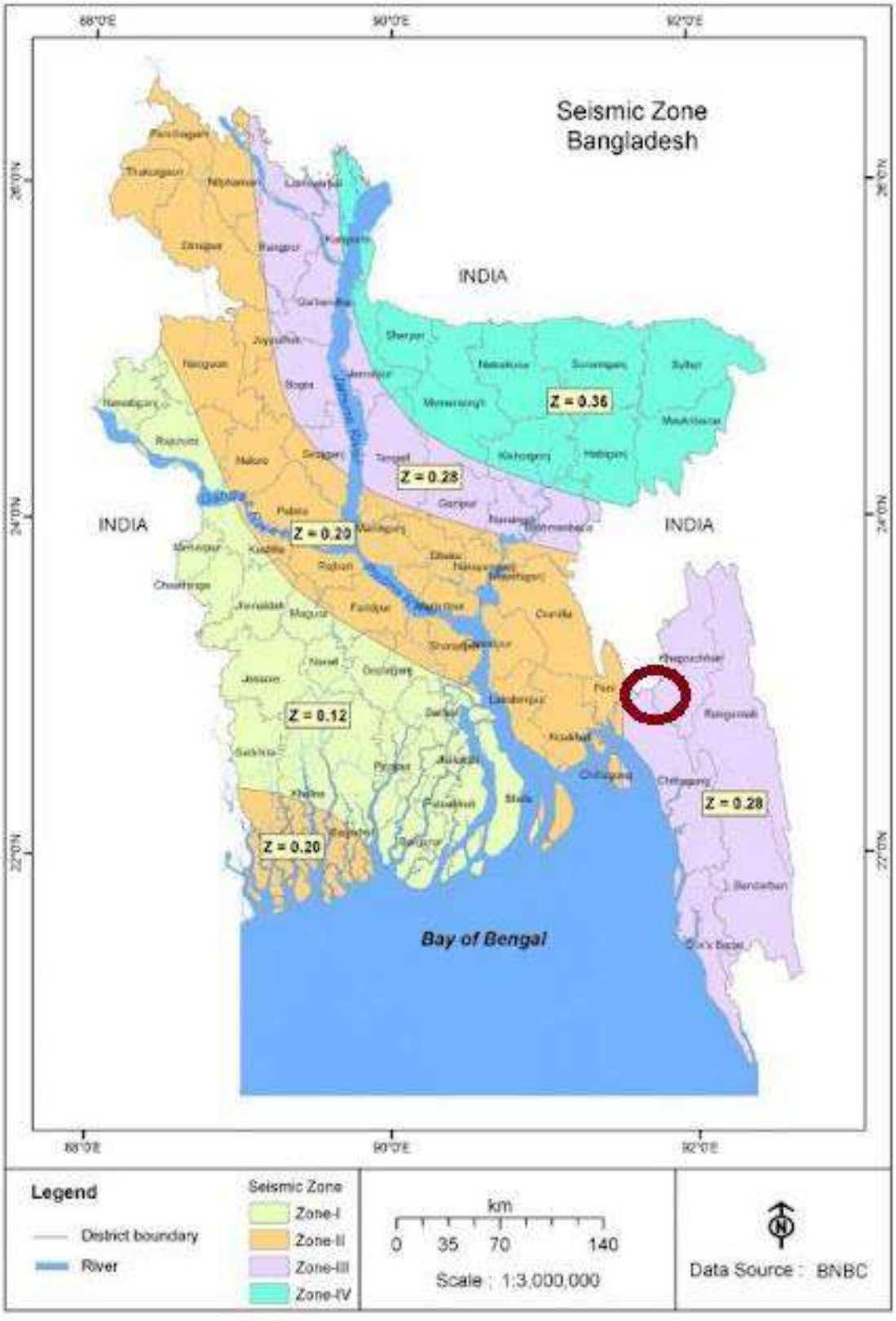

Figure 4-8: Seismic Zoning Map of Bangladesh (BNBC 2017)

Table 4-13: Description of Seismic Zones [BNBC (2017)]

Seismic Zone	Location	Seismic Intensity	Seismic zone coefficient
1	Southwestern part including Barisal, Khulna, Rajshahi	Low	0.12
2	Lower Central and Northwestern part including Noakhali, Dhaka, Pabna, Dinajpur, as well as Southwestern corner including Sundarbans	Moderate	0.20
3	Upper Central and Northwestern part including Brahmanbaria, Sirajganj, Rangpur	Severe	0.28
4	Northwestern part including Sylhet, Mymensingh, Kurigram	Very Severe	0.36

From the **Figure 4-8** and **Table 4-13**, it is evident that the location of the proposed project alignment in Khagrachari district falls in the Zone 3, and the seismic intensity is severe in the project area with the seismic coefficient 0.28. Hence, High seismic hazard will be considered for the proposed alignment.

4.5 Natural Disasters

4.5.1 Floods

Bangladesh is prone to flooding; the coastal flooding as well as the bursting of Bangladesh's riverbanks is common and severely affects the landscape of the country. 75% of Bangladesh is less than 10m above sea level and 80% is flood plain, therefore rendering Bangladesh as a nation very much at risk of further widespread damage. Flooding normally occurs during the monsoon season from June to September during the monsoon. The convectional rainfall of the monsoon is added to by relief rainfall caused by the Himalayas. Melt-water from the Himalayas is also a significant input and flood every year. **Figure 4-9Error! Reference source not found.** shows the positions of the project site over the flood risk map of Bangladesh. It can be observed that the proposed project areas are subject to no flood prone area. So, during design flood level of the area should not be considered.

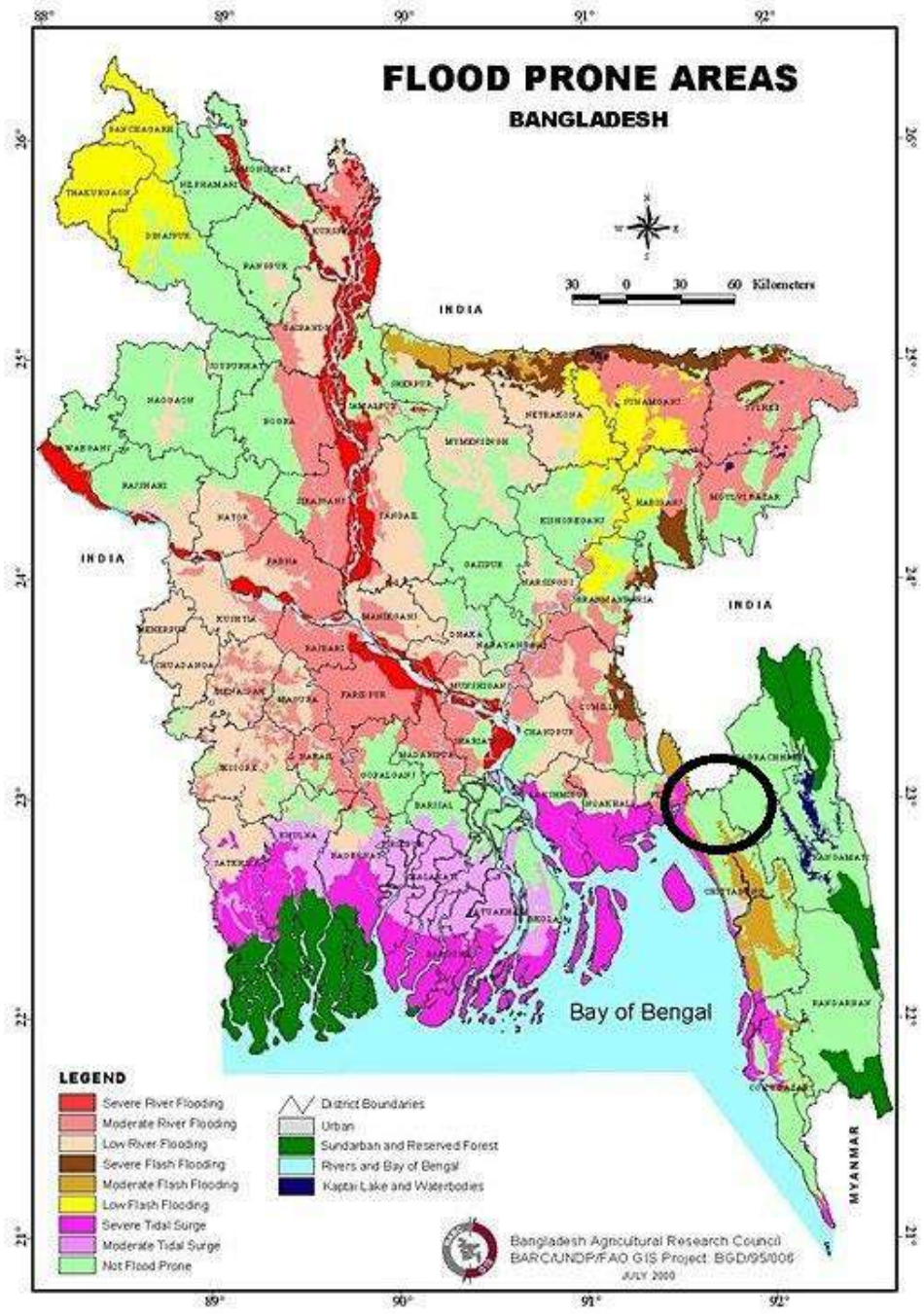

Figure 4-9: Flood Prone Areas of Bangladesh

4.5.2 Cyclone and Storm Surge

Due to its vulnerable geographic location, Bangladesh suffers from frequent and devastating tropical cyclones and tidal surges. The funnel-shaped northern portion of the Bay of Bengal causes tidal bores when cyclones make landfall, and thousands of people living in the coastal areas are affected. Of the last 18 severe cyclones in Bangladesh that occurred between 1905 and 1991, as many as seven hit Chittagong City, Cox's Bazar and vicinity, causing severe damage.

Devastating cyclones and associated storm surges hit the coastal zones almost every year and are usually accompanied by high-speed winds, sometimes reaching 250 km/hr or more and with 3 m to 10 m high waves, causing extensive damage to life, property and livestock. These cyclones usually occur in two seasons, April-May and October-November – i.e., before and after the monsoon season. The proposed project area is located in the international boundary area and low wind area for the cyclone and storm surge. The cyclone and storm surges affected areas are shown in **Figure 4-10**.

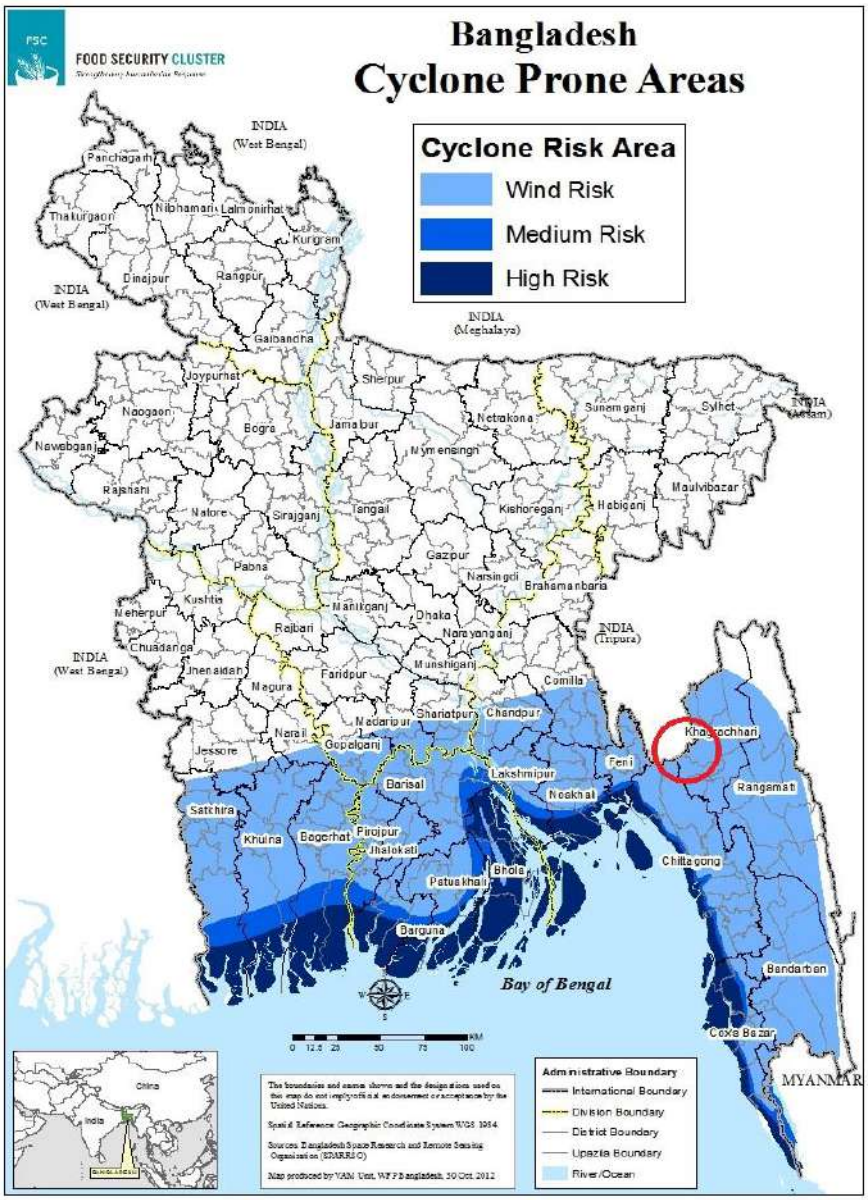

Figure 4-10: Cyclone and Storm Surge Areas of Bangladesh

4.6 Ecological Environment

The flora and fauna of this region possess the combined characteristics of the tropical, Himalayan sub-tropical and sub alpine and alpine plain. Biodiversity is shaped by the biotic

and abiotic components of its environment and there is a rich assemblage of diverse habitats and vegetation. This diversity is further reflected in different types of ecosystems.

In this area, the resident animals are Hedgehog, Moorfowl, snake, squirrel, Rat, Fox, Boa, Monkey, Puma, Hanuman, Rabbit etc. Main agricultural crops: Banana, Coconut, Hog-plum, Rubber tree, Ash tree, Sal tree, Bamboo, Silk cotton, Rain tree, Arjun tree, Mahogany, Taro, Deodaru, Banyan, Northern black wattle. Main fruits are Mango, Hog Plum, Bell, Indian Jujube, Pomelo, Jackfruit, Date Plum tree, Coconut Palm, Areca Nut, Doub Palm, Figs etc.

4.6.1 Terrestrial Flora

The following terrestrial floral species have been identified in the proposed project area during the field survey. Lots of terrestrial flora were observed in the adjacent to the project area. Most of the flora is planted and have economic value to the society. Generally, the terrestrial floral species make a complex ecosystem in which wildlife has direct relationship through their ecological niche. Small fruit garden and vegetable plantation were observed within the project area. Scattered terrestrial flora were also observed in and around the project. Common terrestrial floras are listed in **Table 4-14**.

Table 4-14: List of Trees in the Area

Local Name	English Name	*Scientific Name*
Amm	Mango	*Mangifera indica*
Raintree	Raintree	*Samanea saman*
Kodom	Burflower tree	*Anthocephalus indicus*
Tula	Cotton tree	*Bombax ceriba*
Akashiya	Earleaf acacia	*Acacia auriculiformis*
Eucalyptus	Eucalyptus	*Eucalyptus obliqua*
Arjun	Arjun tree	*Terminalia arjuna*
Jam	Jambul	*Syzygium cumini*
Badam	Nut tree	*Arachis hypogra*
Jarul	Giant Crape	*Lagerstroemia speciosa*
Bot	Banyan	*Ficus benghalensis*
Kathal	Jackfruit	*Artocarpus heterophyllus*
Koroi	Lebbek	*Albizia lebbeck*
Jhau	Tamarisk	*Casuarina equisetifolia*
Mahogany	Mahogany	*Swietenia mahagoni*

4.6.2 Terrestrial Fauna

Fauna is all of the animal life of any particular region or time. The major faunal groups are Birds, Amphibians, Reptiles Mammals and Fishes. Within the study area, there are several faunal species are found.

Birds

The birds were identified visually by hearing their calls and also by digitally recorded. This method involves identifying all the birds; it has been seen or heard while standing at a series of points along a transect (Straight line through the site). Focus Group Discussion (FGD) with local people helps us to get information of the local species available in the project area.

Most common species are Woodpecker (Picidae), Cormorants (Phalacrocoracidae), Owl (Strigiformes), Hudhud (Upupa epops), Chokh Gel (Hierococcyx varius), Nilkant (Coracias benghalensis), Ababil, (Apodidae), House Crow (Corvus splendens), etc.

Amphibians & Reptiles (Herpetofauna)

Amphibians and reptilians' groups are known as herpetofauna. Amphibians and Reptiles have been assessed on an opportunistic basis by the team. For this inventory, it has been used a combination of diurnal and nocturnal time-recorded visual encounter surveys ("general surveys"), road driving with capturing digital image from the spot. Interviews were held with local people and Focus Group Discussion (FGD) with local people help us to get information of the local species available in the study area. During field investigation, 2 species of reptiles were recorded from the study area which are as follows.

Table 4-15: List of Reptiles

Common Name	Local Name	Scientific Name	IUCN Red List Status
Snake	Shap	*Serpentes*	LC
Boa	Boa	*Boa constrictor*	LC

NOTE: LC-Least Concern, NT-Near Threatened, VU- Vulnerable, NA-Not Assessed

Source: Field Survey by IAA Team, 2021

Mammal

For mammal's inventory, it is generally huge challenging, time consuming as well as costly. During the inventory of this project area with the stipulated short time, it has been followed "**Observational methods**" including imaging record by digital camera, identification of dung or feces, foot print, tracks and others signs, night walks. Focus Group Discussion (FGD) with local people also consider during this inventory of the project area.

It has been recorded seven mammal species in the project area. Mammals that were found in the project area are species are Rat (Rattus), Monkey (Rhesus macaque), Honumans (Semnopithecus entellus), Puma (Puma), Squirrel (Sciuridae), Fox (Vulpes vulpes), Hedgehog (Erinaceinae).

4.7 Aquatic Ecosystem in the Project Site

4.7.1 Aquatic Flora

Aquatic floral species grow in rivers, canals, ditches, seasonal wetland and low-lying agricultural lands in submerged, free-floating, or rooted floating states. Common aquatic floral species in the study areas include Kochuripana (Eichhornia crassipes), Kalmi (Ipomoea

aquatic), Topapna (Pistia Strateotes), Water Lily (Nymphaea nouchali) and Ipomea (Ipomea crassicaulis) etc.

4.7.2 Aquatic Fauna

Aquatic fauna refers to wildlife and fish species that fully or partially depend on aquatic environment to live or to get food, shelter, nest, and breed and produce offspring. Amphibian, reptile, bird, mammal and freshwater fish species that depend on aquatic environment are the main component of aquatic fauna for the study area. Reproduction, breeding and multiplication of aquatic fauna is usually finely tuned and adjusted with the rhythm and amplitude of monsoon flooding.

4.7.3 Fisheries

According to the information of Upazila fisheries officers and Focus Group Discussion (FGD), the most abundant species are sing, taki,koi, magur, jatputi, chunaputi, khalisha, guraIcha, guchi, baim, mola,chela, faisa,gulsa, tengra, takaor, boal, kachki, chela, small shrimp , magur ,bata , rui, catla and mrigel The bigger fishes are being endangered as they need more than a year to mature and spawn and are gradually failing to escape the tremendous fishing pressure. The small fishes are yearly spawned and could sustain even during high pressure better than the big fishes. Some of the available species as per Upazila officer (DoF) and local peoples.

Table 4-16: List of Fishes

Local Name	English Name	Scientific Name	Habitat
Chitol	Humped Featherback	*Natopterus chitola*	BR
Foli	Gray Featherback	*Natopterus notopterus*	BR
Kachki	Ganges River-Sprat	*Corica soborna*	R
Taki	Spotted Snakehead	*Channa punctatus*	B
Shol	Stripped Snakehead	*Channa striatus*	B
Mola	Indian Carplet	*Amlypharyngodom mola*	BR
Catla	Catla	*Catla catla*	RP
Mrigal	Mrigal Carp	*Cirrhinuscirrosus*	RP
Tatkini	Reba	*Cirrhinus reba*	RB
Grass Crap	Grass Crap	*Ctenopharyngodom idellus*	RPB
Carpio	Common Carp	*Cyprinus carpio*	RPB
Kalibous	Black Rohu	*Labeo calbasu*	RPB
Rui	Rohu Carp	*Labeo rohita*	RPB
Narkeli Chela	Razorbelly Minnow	*Salmostoma phulo*	RB
Ful Chela	Minnow	*Salmostoma phulo*	RB
Ayre	Long Whiskered Catfish	*Sperata aor*	RB
Rita	Rita	*Rita rita*	R
Boal	Freshwater Shark	*Wallago attu*	RB

Local Name	English Name	Scientific Name	Habitat
Pangas	Pungas Catfish	*Pangasius pangasius*	R
Magur	Walking Catfish	*Clarias batrachus*	B
Shingi	Stinging Catfish	*Heteropneustes fossilis*	B
Kuchia	Gangetic Mud Eel	*Monopterus cuchia*	B
NamaChanda	Glass Fish	*Chanda nama*	RB
ChotoChanda	Indian Glassy Fish	*Pseudambasisranga*	B
Poa	Pama Croaker	*Otolithoides pama*	R
Meni, Roina	Mottled Nandus	*NandusNandus*	B
Telapia	Java Tilapia	*Oreochromis niloticus*	BP
Chiring	Goby	*Apocryptis bato*	RB
Kakila	Freshwater Garfish	*Xenentodon cancila*	RB
Silver Carp	Silver Carp	*Hypophthalmichthes*	RBP
Punti	Swamp Barb	*Puntius chola*	RB
Teri Punti	One Spot Barb	*Puntius terio*	RB
Tit Punti	Ticto Barb	*Puntius ticto*	B
Koi	Walking Fish	*Anabas testudineus*	RB
Khalisha	Stripped Gourami	*Colisa fasiata*	RB
Chata/Boicha	Red Gourami	*Colisa alia*	RB
Gochibaim	Stripped Spiny Eel	*Mastacembelus pancalus*	BR
Baim	Tire-Track Spiny Eel	*Mastacembelus armatus*	BR

Habitat: R= River, B = Beel and P = Pond

Source: DoF and FGD

4.8 Ecologically Critical Area, Protected Area, National Park etc.

4.8.1 Ecologically Critical Area (ECA)

It is an environmental protection zone, defined by the Government of Bangladesh under the Bangladesh Environment Conservation Act, 1995, where ecosystem is considered to be threatened to reach a critical state. The declaration states restrictions on hunting, fishing, all activities that could result in the destruction of floral or faunal habitats, activities that could destroy natural characteristics of water and soil, activities detrimental to fishery, installation of polluting industrial units, and discharge of domestic/ industrial liquid waste into the river. No ECA exists at or near the proposed project boundary.

4.8.2 Protected Area (PA)

A Protected Area (PA) refers to a geographically defined terrestrial or marine area designated and managed through legal or other effective means to ensure the long-term conservation of biological diversity, natural resources, and associated cultural values. The project area includes Sal forest patches and portions of the Ramgarh–Sitakunda Reserve Forest, which provide important habitats for local wildlife. The proposed road widening will require the removal of approximately 21,151 trees under the management of the Forest Department,

potentially affecting forest cover, ecological integrity, and wildlife habitats. The matter has been discussed with the Department of Forest (DoF), which has indicated that necessary measures will be undertaken for forest conservation. The required environmental clearance from the Department of Environment (DoE) is also be obtained (see annex), subject to compliance with applicable conservation requirements.



Figure 4-11: Shal Forest in Ramgarh



Figure 4-12: Cutout of Forest Due to Construction

4.8.3 National Park (NP)

A National Park (NP) is a reserve land, usually declared and owned by a national government, protected from most human development activities and pollution. No NP exists at or near the proposed project area.

4.8.4 Game Reserve (GR)

A Game Reserve (GR) is an area of land set aside for maintenance of wildlife for tourism or hunting purposes. No GR exists at or near the proposed project area.

4.8.5 Wildlife Sanctuaries (WS)

A Wildlife Sanctuary (WS) is an area that assures the natural conditions necessary to protect nationally significant species, groups of species, biotic communities, or physical features of the environment where these require specific human manipulation for their perpetuation. No WS exists at or near the proposed project area.

4.9 Assessment of Social Baseline

4.9.1 Assessment of Social Baseline

The proposed project is located in Ramgarh Upazila, Fatikchari upazila and Mirshorai upazila. Ramgarh, Fatikchari, Mirshorai is a very important South –Eestern part in Chittagong Division. The proposed project alignment passes through 3 unions (Korerhat Union, Mirshorai, Chattogram, Datmara Union, Fotikchari, Chattogram, Baganbazar Union, Fotikchari, Chattogram and 2 Pouroshovas (Baraiyarhat Pouroshova, Mirshorai, Chattogram, Ramghar Pouroshova, Ramghar, Khagrachori).

As a part of the Socio-Economic Environment of the construction of Baraiyerhat-Heako-Fatikchori Road (38 km) over the Fatikchari, Mirshorai and Ramgarh Upazila Economic Zone connecting road under Chittagong and Khagrachori District', a questionnaire-based household and project affected population (PAP) survey has been carried out. The broad objective of the household and PAP survey is to present a socio-economic profile of the population living in the influencing zone of the proposed road location on establishing the socio-economic baseline.

4.9.2 Demographic Profile

4.9.2.1 Population and Household

According to the Population and Housing Census 2022 (District Reports of Chattogram and Khagrachhari), there are 142,970, 111,009 and 13,606 households (HHs) in Fatikchhari, Mirsarai and Ramgarh upazila respectively. The total population is 642,076, 472,777 and 60,734 respectively in these three upazilas, which will be influenced by the implementation of the proposed road. A total of 309,701 male and 332,375 female lives in Fatikchhari upazila, 228,303 male and 244,474 female in Mirsarai upazila, and 30,131 male and 30,603 female in Ramgarh upazila. The sex ratio (males per 100 females) is 93.18, 93.39 and 98.46, and the average size of a general household is 4.39, 4.19 and 4.39 respectively in Fatikchhari, Mirsarai and Ramgarh upazila. The demography of the study area is shown in the tables below.

Table 4-17: Population by sex in the study upazilas, 2022

Upazila	Total	Male	Female
Fatikchhari	642,076	309,701	332,375
Mirsarai	472,777	228,303	244,474
Ramgarh	60,734	30,131	30,603
Total (3 upazilas)	**1,175,587**	**568,135**	**607,452**

Source: Population and Housing Census 2022, District Report: Chattogram & Khagrachhari

Table 4-18: Household, household size and sex ratio in the study upazilas, 2022

Upazila	Total households	General households	Population in general HHs	Average HH size	Sex ratio (Total)	Sex ratio (Rural)	Sex ratio (Urban)
Fatikchhari	142,970	141,579	621,041	4.39	93.18	93.26	92.96
Mirsarai	111,009	109,581	458,898	4.19	93.39	93.32	93.65
Ramgarh	13,606	13,295	58,367	4.39	98.46	101.42	97.48

Source: Population and Housing Census 2022, District Report: Chattogram & Khagrachhari

Fatikchhari is by far the most populous of the three upazilas, holding about 54.62% of the combined population, followed by Mirsarai (40.22%), while Ramgarh is a small hill upazila with only 5.17%. Females outnumber males in all three upazilas; the gap is wider in Fatikchhari and Mirsarai (sex ratio about 93), which is typical of Chattogram upazilas with high male out-migration for work and overseas employment, whereas Ramgarh is close to parity (98.46). The average household size is the same in Fatikchhari and Ramgarh (4.39) and slightly smaller in Mirsarai (4.19). A notable difference is settlement pattern: about 74.88% of Ramgarh households are urban, against 25.82% in Fatikchhari and 19.3% in Mirsarai.

4.9.2.2 Religion & Culture

According to the Population and Housing Census 2022 (District Reports of Chattogram and Khagrachhari), Muslims form the majority in all three upazilas. In Fatikchhari upazila the population is made up of Muslims (569,978), Hindus (62,414), Buddhists (8,656), Christians (201) and others (840). In Mirsarai upazila there are Muslims (410,248), Hindus (56,343), Buddhists (5,854), Christians (216) and others (133). In Ramgarh upazila there are Muslims (39,775), Hindus (11,636), Buddhists (8,887), Christians (248) and others (195). The census also records an ethnic (indigenous) population of 12,877 in Fatikchhari, 3,660 in Mirsarai and 16,317 in Ramgarh.

Table 4-19: Population by religion in the study upazilas, 2022

Upazila	Total	Muslim	Hindu	Christian	Buddhist	Others
Fatikchhari	642,089	569,978	62,414	201	8,656	840
Mirsarai	472,794	410,248	56,343	216	5,854	133
Ramgarh	60,741	39,775	11,636	248	8,887	195
Fatikchhari (%)	100.00	88.77	9.72	0.03	1.35	0.13
Mirsarai (%)	100.00	86.77	11.92	0.05	1.24	0.03
Ramgarh (%)	100.00	65.48	19.16	0.41	14.63	0.32

Source: Population and Housing Census 2022, District Report: Chattogram & Khagrachhari

Table 4-20: Ethnic population by sex in the study upazilas, 2022

Upazila	Total	Male	Female	% of upazila population
Fatikchhari	12,877	6,404	6,473	2.01
Mirsarai	3,660	1,995	1,665	0.77
Ramgarh	16,317	8,114	8,203	26.87

Source: Population and Housing Census 2022, District Report: Chattogram & Khagrachhari

Fatikchhari (88.77% Muslim) and Mirsarai (86.77% Muslim) have a very similar religious composition, with Hindus as the main minority (9.72% and 11.92%). Ramgarh is markedly more diverse: Muslims make up 65.48%, Hindus 19.16% and Buddhists 14.63%, reflecting its location in the Chittagong Hill Tracts. Similarly, ethnic communities account for about 26.87% of the population of Ramgarh, compared with only 2.01% in Fatikchhari and 0.77% in Mirsarai. Their presence along the Ramgarh end of the alignment should be verified during the PAP survey.

4.9.2.3 Literacy Rate

According to the Population and Housing Census 2022 (District Reports of Chattogram and Khagrachhari), the literacy rate (population aged 7 years and above) is 76.11% in Fatikchhari upazila, with a male literacy rate of 78.16% and a female literacy rate of 74.24%. In Mirsarai upazila the literacy rate is 79.61% (male 82.35%, female 77.1%). In Ramgarh upazila the literacy rate is 76.08%, where the female literacy rate (72.09%) is lower than the male literacy rate (80.14%).

Table 4-21: Literacy rate by sex and age group in the study upazilas, 2022 (%)

Upazila	5+ Total	5+ Male	5+ Female	7+ Total	7+ Male	7+ Female	15+ Total	15+ Male	15+ Female
Fatikchhari	74.97	76.79	73.30	76.11	78.16	74.24	72.03	74.46	69.92
Mirsarai	79.01	81.54	76.68	79.61	82.35	77.10	76.10	79.31	73.27
Ramgarh	75.27	79.02	71.58	76.08	80.14	72.09	71.29	76.41	66.38

Source: Population and Housing Census 2022, District Report: Chattogram Chattogram & Khagrachhari

4.9.2.4 Total Literate Population

The census reports do not publish the number of literate persons directly, so the literate population (aged 7 years and above) has been estimated by applying the 7+ literacy rate to the 7+ population. On this basis there are about 415,246 literate persons in Fatikchhari (203,803 male and 211,462 female), 325,419 in Mirsarai (161,147 male and 164,286 female) and 39,031 in Ramgarh (20,354 male and 18,675 female).

Table 4-22: Estimated literate population aged 7 years and above in the study upazilas, 2022

Upazila	Population 7+ (Total)	Population 7+ (Male)	Population 7+ (Female)	Literate 7+ (Total)	Literate 7+ (Male)	Literate 7+ (Female)
Fatikchhari	545,586	260,751	284,835	415,246	203,803	211,462
Mirsarai	408,767	195,685	213,082	325,419	161,147	164,286
Ramgarh	51,303	25,398	25,905	39,031	20,354	18,675
Total (3 upazilas)	**1,005,656**	**481,834**	**523,822**	**779,696**	**385,304**	**394,423**

Source: Derived from Population and Housing Census 2022, District Reports of Chattogram and Khagrachhari,.

Mirsarai has the highest literacy rate (79.61%), while Fatikchhari (76.11%) and Ramgarh (76.08%) are almost equal. Ramgarh shows the widest gender gap (about 8.0 percentage points), compared with about 3.9 points in Fatikchhari and 5.2 points in Mirsarai. Literacy among adults (15+) is lowest in Ramgarh (71.29%) and Fatikchhari (72.03%). In absolute terms, Fatikchhari has the largest literate population because of its size, while Ramgarh has fewer than 40,000 literate persons.

4.9.2.5 Housing Structure, Tenancy and Residence

According to the Population and Housing Census 2022 (District Reports of Chattogram and Khagrachhari), almost all households in the study area are general households. The number of general households is 141,579, 109,581 and 13,295 in Fatikchhari, Mirsarai and Ramgarh upazila respectively. In Fatikchhari upazila there are 213 institutional and 1,114 other households; in Mirsarai there are 180 institutional and 1,248 other households; and in Ramgarh there are 24 institutional and 282 other households. Slum households are few (69 in Fatikchhari, 65 in Mirsarai and none in Ramgarh). In terms of tenancy, most households live in their own dwelling: 123,805 in Fatikchhari, 99,865 in Mirsarai and 11,804 in Ramgarh.

Table 4-23: Households by type of household and dwelling in the study upazilas, 2022

Upazila	All HHs (excl. floating)	General HH	Institutional HH	Other HH	Slum HH	Floating HH	Rural HH	Urban HH
Fatikchhari	142,906	141,579	213	1,114	69	64	106,050	36,920
Mirsarai	111,009	109,581	180	1,248	65	0	89,579	21,430
Ramgarh	13,601	13,295	24	282	0	5	3,418	10,188

Source: Population and Housing Census 2022, District Report: Chattogram & Khagrachhari

Table 4-24: General households by ownership status (tenancy) of dwelling in the study upazilas, 2022

Upazila	Total	Own dwelling	Rented, own dwelling elsewhere	Rented, no own dwelling	Rent-free, own dwelling elsewhere	Rent-free, no own dwelling
Fatikchhari	141,579	123,805	7,079	1,322	858	8,515
Mirsarai	109,581	99,865	7,162	1,258	357	939
Ramgarh	13,295	11,804	782	313	92	304
Fatikchhari (%)	100.00	87.45	5.00	0.93	0.61	6.01
Mirsarai (%)	100.00	91.13	6.54	1.15	0.33	0.86
Ramgarh (%)	100.00	88.79	5.88	2.35	0.69	2.29

Source: Population and Housing Census 2022, District Report: Chattogram & Khagrachhari

The household composition is very similar in the three upazilas, with general households accounting for about 98–99% of all households. Ownership of the dwelling is highest in Mirsarai (91.13%), followed by Ramgarh (88.79%) and Fatikchhari (87.45%). Fatikchhari stands out for the share of households living rent-free without any dwelling of their own (6.01%), a group that is likely to be vulnerable if displaced. Ramgarh has a relatively higher share of rented households with no other dwelling (2.35%), consistent with its largely urban (Paurashava-based) settlement pattern.

4.9.2.6 Water Supply

According to the Population and Housing Census 2022 (District Reports of Chattogram and Khagrachhari), tube-wells (deep or shallow) are the main source of drinking water in the study area. In Fatikchhari upazila, 140,127 households use tube-wells, 124 use tap/piped supply and 1,328 depend on other sources. In Mirsarai upazila, 109,155 households use tube-wells and 426 use other sources (no tap supply is recorded). In Ramgarh upazila, 11,010 households use tube-wells, 75 use tap supply, 2,110 use wells and 100 depend on other sources.

Table 4-25: General households by main source of drinking water in the study upazilas, 2022

Upazila	Total	Tap/ Pipe	Tube-well	Bottled/ Jar	Well	Pond/ River/ Canal	Spring	Rain water	Others
Fatikchhari	141,579	124	140,127	80	993	78	111	0	66
Mirsarai	109,581	0	109,155	37	175	82	130	0	2
Ramgarh	13,295	75	11,010	11	2,110	25	47	6	11
Fatikchhari (%)	100.00	0.09	98.97	0.06	0.70	0.06	0.08	0.00	0.05
Mirsarai (%)	100.00	0.00	99.61	0.03	0.16	0.07	0.12	0.00	0.00
Ramgarh (%)	100.00	0.56	82.81	0.08	15.87	0.19	0.35	0.05	0.08

Source: Population and Housing Census 2022, District Report: Chattogram & Khagrachhari

Fatikchhari (98.97%) and Mirsarai (99.61%) rely almost entirely on tube-wells, and piped water supply is practically absent. Ramgarh has a lower tube-well dependence (82.81%), and about 15.87% of households still use (ring) wells, which are more prone to contamination and drying up in the dry season. Construction activities near wells and tube-wells along the alignment, especially in Ramgarh, should therefore be managed carefully.

4.9.2.7 Electricity Coverage

According to the Population and Housing Census 2022 (District Reports of Chattogram and Khagrachhari), 138,718 households in Fatikchhari, 108,946 in Mirsarai and 12,420 in Ramgarh have an electricity connection (national grid, solar or other source). Households with no electricity connection number 2,861, 635 and 875 respectively.

Table 4-26: General households by main source of electricity in the study upazilas, 2022

Upazila	Total HHs	National grid	Solar power	Others	No electricity	Coverage (%)
Fatikchhari	141,579	130,720	7,885	113	2,861	97.98
Mirsarai	109,581	107,254	1,651	41	635	99.42
Ramgarh	13,295	8,051	4,153	216	875	93.42

Source: Population and Housing Census 2022, District Report: Chattogram & Khagrachhari

Electricity coverage is almost universal in Mirsarai (99.42%) and Fatikchhari (97.98%), mostly through the national grid. Ramgarh has the lowest coverage (93.42%) and depends much more on solar power: only 60.56% of its households are on the national grid, while 31.24% use solar power. Grid poles and lines along the alignment may need to be relocated during construction.

4.9.2.8 Sanitation Facility

According to the Population and Housing Census 2022 (District Reports of Chattogram and Khagrachhari), in Fatikchhari upazila 78,071 households use flush toilets with safe disposal, 18,972 use flush toilets with unsafe disposal and 32,615 use pit latrines with slab, while 9,935 use pit latrines without slab or kancha/hanging latrines and 1,986 households practise open defecation. In Mirsarai upazila the corresponding figures are 66,577, 12,608, 26,272, 3,915 and 209. In Ramgarh upazila they are 4,753, 1,766, 3,896, 2,496 and 384 respectively.

Table 4-27: General households by toilet facilities in the study upazilas, 2022

Upazila	Total	Flush, safe disposal	Flush, unsafe disposal	Pit latrine with slab	Pit latrine without slab	Kancha/ hanging	Open defecation
Fatikchhari	141,579	78,071	18,972	32,615	5,710	4,225	1,986
Mirsarai	109,581	66,577	12,608	26,272	2,634	1,281	209
Ramgarh	13,295	4,753	1,766	3,896	1,202	1,294	384
Fatikchhari (%)	100.00	55.14	13.40	23.04	4.03	2.98	1.40
Mirsarai (%)	100.00	60.76	11.51	23.97	2.40	1.17	0.19
Ramgarh (%)	100.00	35.75	13.28	29.30	9.04	9.73	2.89

Source: Population and Housing Census 2022, District Report: Chattogram & Khagrachhari

Table 4-28: General households by type of toilet use (shared/not shared) in the study upazilas, 2022

Upazila	Total	Not shared	Shared	Shared (%)
Fatikchhari	139,593	122,218	17,375	12.45
Mirsarai	109,372	93,623	15,749	14.40
Ramgarh	12,911	10,450	2,461	19.06

Source: Population and Housing Census 2022, District Report: Chattogram & Khagrachhari

Sanitation is best in Mirsarai, where 60.76% of households use flush toilets with safe disposal and only 0.19% practise open defecation. Fatikchhari is in between (55.14% safe flush, 1.4% open defecation). Ramgarh has the weakest coverage: only 35.75% have safe flush toilets, about 18.77% still use unimproved (unslabbed or hanging) latrines, 2.89% have no latrine, and the share of households sharing a toilet is highest (19.06%). Labour camps in Ramgarh in particular will need their own sanitation facilities so as not to put pressure on local ones.

4.9.2.9 Employment Status

According to the Population and Housing Census 2022 (District Reports of Chattogram and Khagrachhari), of the population aged 5 years and above, 163,638 people are employed in Fatikchhari, 125,872 in Mirsarai and 17,071 in Ramgarh. Another 167,350, 134,192 and 15,973 persons respectively are engaged in household work, and 6,763, 7,847 and 1,207 are looking for work.

Table 4-29: Population aged 5 years and above by working status in the study upazilas, 2022

Upazila	Total (5+)	Employed	Household work	Looking for work	Do not work
Fatikchhari	573,321	163,638	167,350	6,763	235,570
Mirsarai	427,097	125,872	134,192	7,847	159,186
Ramgarh	54,056	17,071	15,973	1,207	19,805
Fatikchhari (%)	100.00	28.54	29.19	1.18	41.09
Mirsarai (%)	100.00	29.47	31.42	1.84	37.27
Ramgarh (%)	100.00	31.58	29.55	2.23	36.64

Source: Population and Housing Census 2022, District Report: Chattogram & Khagrachhari

Table 4-30: Employed population aged 5 years and above by sex in the study upazilas, 2022

Upazila	Employed (Total)	Male	Female	Employment rate Total (%)	Male (%)	Female (%)
Fatikchhari	163,638	139,203	24,435	28.54	50.66	8.18
Mirsarai	125,872	111,140	14,732	29.47	54.21	6.63
Ramgarh	17,071	14,945	2,126	31.58	55.79	7.80

Source: Population and Housing Census 2022, District Report: Chattogram (Table 3.1.21) and District Report: Khagrachhari (Table 3.1.21), BBS

Fatikchhari has the largest employed population in absolute terms, but Ramgarh has the highest employment rate (31.58% of the 5+ population), followed by Mirsarai (29.47%) and Fatikchhari (28.54%). Female participation in paid work is low everywhere (between 6.63% and 8.18% of females aged 5+), as most women are recorded under household work. The share of people looking for work is highest in Ramgarh (2.23%) and Mirsarai (1.84%), which points to local demand for construction-phase jobs.

4.9.2.10 Field of Employment

According to the Population and Housing Census 2022 (District Reports of Chattogram and Khagrachhari), in Fatikchhari upazila 56,786, 18,706 and 88,146 people are employed in the agriculture, industry and service sector respectively. In Mirsarai upazila the figures are 45,868, 23,276 and 56,728, and in Ramgarh upazila 7,341, 1,211 and 8,519 respectively.

Table 4-31: Employed population aged 5 years and above by field (sector) of employment in the study upazilas, 2022

Upazila	Total employed	Agriculture	Industry	Service	Agriculture (%)	Industry (%)	Service (%)
Fatikchhari	163,638	56,786	18,706	88,146	34.70	11.43	53.87
Mirsarai	125,872	45,868	23,276	56,728	36.44	18.49	45.07
Ramgarh	17,071	7,341	1,211	8,519	43.00	7.09	49.90

Source: Population and Housing Census 2022, District Report: Chattogram & Khagrachhari

The service sector is the largest employer in all three upazilas, at 53.87% in Fatikchhari, 49.9% in Ramgarh and 45.07% in Mirsarai. Agriculture is the second main source of employment and is most important in Ramgarh (43.0%). Industrial employment is highest in Mirsarai (18.49%), which is linked to the economic zone and industrial development there, and lowest in Ramgarh (7.09%). Improved road connectivity is expected to widen access to industrial and service jobs for people in Ramgarh and Fatikchhari.

4.9.3 Assessment of Infrastructure Facilities

4.9.3.1 Housing Condition

According to the Population and Housing Census 2022 (District Reports of Chattogram and Khagrachhari), most households in the study area live in kancha houses, which indicates a generally low social and economic status. Kancha houses are vulnerable and increase the risk to life during natural disasters. In Fatikchhari upazila there are 39,548 pucca, 20,302 semi-pucca, 80,651 kancha and 1,078 jhupri houses. In Mirsarai upazila there are 28,146 pucca, 10,654 semi-pucca, 70,216 kancha and 565 jhupri houses. In Ramgarh upazila there are 980 pucca, 2,101 semi-pucca, 9,777 kancha and 437 jhupri houses.

Table 4-32: General households by structure of main dwelling (housing condition) in the study upazilas, 2022

Upazila	Total	Pucca	Semi-pucca	Kancha	Jhupri
Fatikchhari	141,579	39,548	20,302	80,651	1,078
Mirsarai	109,581	28,146	10,654	70,216	565
Ramgarh	13,295	980	2,101	9,777	437
Fatikchhari (%)	100.00	27.93	14.34	56.97	0.76
Mirsarai (%)	100.00	25.69	9.72	64.08	0.52
Ramgarh (%)	100.00	7.37	15.80	73.54	3.29

Source: Population and Housing Census 2022, District Report: Chattogram & Khagrachhari

Kancha houses dominate in all three upazilas, but the share rises from 56.97% in Fatikchhari to 64.08% in Mirsarai and 73.54% in Ramgarh. Pucca houses are much more common in Fatikchhari (27.93%) and Mirsarai (25.69%) than in Ramgarh (7.37%), and Ramgarh also has the highest share of jhupri (makeshift) dwellings (3.29%). Housing is therefore most vulnerable on the Ramgarh side, where the replacement value of affected structures will be lower but the vulnerability of the owners higher.

4.9.4 Distribution of Household Heads

The following table shows the sex-wise distribution of heads of general households in the project area. In Fatikchhari upazila, the number of male-headed households (97,599) is higher than that of female-headed households (43,980). In Mirsarai upazila, there are 76,685 male-

headed and 32,893 female-headed households. In Ramgarh upazila, there are 10,635 male-headed and 2,660 female-headed households, according to the Population and Housing Census 2022.

Table 4-33: Head of general household by sex in the study upazilas, 2022

Upazila	Total	Male-headed	Female-headed	Male-headed (%)	Female-headed (%)
Fatikchhari	141,579	97,599	43,980	68.94	31.06
Mirsarai	109,578	76,685	32,893	69.98	30.02
Ramgarh	13,295	10,635	2,660	79.99	20.01

Source: Population and Housing Census 2022, District Report: Chattogram & Khagrachhari

Female-headed households are unusually common in Fatikchhari (31.06%) and Mirsarai (30.02%), well above the national average of 17.90%, which is consistent with the low sex ratio and the large number of men working away from home or abroad. In Ramgarh the share is 20.01%. Female-headed households are a recognised vulnerable group, so they should be identified individually in the PAP census and given priority in resettlement and livelihood support.

CHAPTER 5 ANTICIPATED IMPACTS AND MITIGATION MEASURES

5.1 Introduction

Environmental consequences of various project operations on different ecological, physio-chemical, and human-interest related parameters have been identified and studied as part of the Environmental Impact Assessment (EIA), both during the pre- construction phase, construction phase and the operation phase. The major activities to be carried out during the construction phase include:

- Widening, strengthening & raising of 36.50 km road
- Construction of 9 nos R.C.C & P.C girder bridge
- Construction of 23 nos R.C.C box culvert

The environmental impacts of the project activities have been assessed separately for the preconstruction, construction and operational phases of the project, with a focus on issues that could have significant negative consequences, such as: (i) impacts on the physio-chemical environment (air quality, noise level and water), (ii) ecological impacts (impact on flora and fauna) and (iii) possible socio-economic impacts during the construction and operational phases.

This section identifies the project areas overall impacts on the physical, ecological and socioeconomic environment. Any change to the environments current state is defined as an environmental impact. On the basis of baseline data obtained from secondary and primary sources, probable consequences have been identified. The current environmental setting of the project area, as well as the nature of the proposed operations, were considered when conducting the environmental impact assessment. Potential environmental consequences connected with the proposed project activities of both the project are characterized as follows:

- Impacts during design/pre-construction
- Impacts during construction and
- Impacts during operation

5.2 Project Corridor

Right of Way (RoW) and Corridor of Impact are the two criteria used to define the Project Corridor (Col).

5.2.1 Project Right of Way (RoW)

The proposed project coordinator will have a clearly defined RoW that will be approximately 32.4 m. The majority of the major construction projects will be contained within the RoW. Because the project will have a direct influence on the infrastructure and commercial activities within the proposed RoW, they must be moved.

5.2.2 Corridor of Impact (CoI)

The projected Impact Corridor (Col) was defined as the area of the project that has a direct or indirect impact. Houses will be relocated; utilities will be disrupted and employees will be exposed to air and noise pollution during construction. Noise, dust emissions, camp sites, and borrow sites could all have indirect effects that go beyond the RoW. The direct Col of surface water bodies will be contained within the proposed projects RoW and will only be temporary during construction.

The project area is separated into two areas based on the types of impacts. One is those associated to the project, which is 32.4 m for the project. The backdrop environmental elements of the project site are covered in another section. This should not include not just the project site itself, but also a one- kilometer radius around it. Due to the nature of the project, however, the direct or indirect impact will not extend beyond 200 meters from the road alignments right of way.

5.3 Anticipated Adverse Impacts and Mitigation Measures

5.3.1 Design/Pre-Construction Stage

Following is a brief description of impacts envisaged during the Preconstruction/Design Phase:

a) Climate

Impact

In the project area the fluctuations and probable increases in rainfall, temperature, and humidity are comparatively high. So, all this term will need to be factored into the road and bridge design. The average rainfall of the proposed project area is 250.82. Also, average maximum temperature 31.38°C and humidity is 80%. It rains heavily during the monsoon period.

Mitigation

Rainfall that is more intense and lasts longer must be considered during the design phase and additional design measures must be included in the final design. Ensure that the road and bridge designs, embankment height, pavement design, and filling material selection are all built to handle abnormally heave rainfall patterns.

b) Landscape/Topography

Impact

Adverse impact on the topography/landscape of the project area may occur. Since the project area has a Shalbon and a part of this forest needs to cut off which will affect the wildlife and environment of the forest. The topography would shift in a permanent way, so a special design requirement is needed for embankments, bridges, culvert and interchanges. The terrain in the project region will alter to some extent.

Mitigation

Harmonization with the surrounding natural scenery was taken into consideration when designing bridges, culverts, embankments, auxiliary facilities etc. Visual changes to the topography will be of permanent but slightly adverse in nature. To save the environment around the forest, tree plantation program will carry on. For cutting down one tree, two trees will be planted in the project area.

a) Hill Cutting

The Widening of Baraiyarhat–Heyako–Ramgarh Road Project involves the cutting of hills and hillocks at 16 proposed locations to facilitate road widening and associated slope adjustments. The total proposed quantity of earth material to be excavated is 18,095 cubic feet (512.46 m^3).

Of the total 38.00 km road length, the initial approximately 8.00 km falls within land previously acquired by the Roads and Highways Department (RHD), while the subsequent 16.00 km passes through the Ramgarh–Sitakunda Reserved Forest area. The Ministry of Environment, Forest and Climate Change granted permission on 2 April 2024 for the use of 90.5353 acres of reserved forest land in favour of RHD.

The mouza-wise distribution of the proposed hill-cutting quantities is presented below.

Mouza-wise Summary of Proposed Hill Cutting

Mouza / Plot (Dag) Details	Proposed Quantity (cubic feet)	Percentage of Total Proposal
Geramara (CS-166, 161, 2998, 171) – Hillock	1,240	6.85%
Geramara (Ramgarh–Sitakunda Reserved Forest) – Hill	4,172	23.06%
Dantmara (CS-376, 8 sections) – Hill	11,763	65.01%
Dantmara and Jangal Dantmara (CS-501) – Hill/Hillock	920	5.08%
Total	18,095	100%

The proposed excavation is expected to generate localized impacts, particularly related to slope stability, soil erosion, sediment transport, drainage obstruction, dust generation, and potential damage to adjacent vegetation. Appropriate engineering controls, slope protection measures, and construction management practices will therefore be required to ensure safe and environmentally sound implementation.

Mitigation

- Clearly demarcate the approved hill-cutting locations, excavation boundaries, and forest-use limits in consultation with the Roads and Highways Department (RHD) and Forest Department to prevent unauthorized excavation and vegetation clearance.

- Undertake site-specific geotechnical assessments and prepare approved engineering drawings, cross-sections, and slope designs specifying the appropriate excavation geometry, bench dimensions, and slope stabilization requirements.
- Obtain the necessary approvals and coordinate with the Forest Department regarding activities within the reserved forest area, including supervision, vegetation clearance restrictions, and compliance with applicable forest-use permission conditions.
- Identify suitable locations for temporary stockpiling and disposal of excavated materials, ensuring that such locations are stable and sufficiently distant from hill edges, natural drainage paths, watercourses, and forested areas.
- Prepare a site-specific excavation method statement and traffic management plan, including arrangements for temporary barriers, warning signs, reflective markers, flaggers, and traffic diversions where necessary.
- Identify locations requiring retaining structures, toe protection, catch drains, guardrails, or crash barriers based on geotechnical assessments and approved road safety designs.

c) Land Acquisition and Resettlement

Impact

One of the major projects related impact will be the land acquisition. The required RoW is 60 m. A total of 68.61 hector land will be required during the project in which RHD has 54.64775 hector own land. Land acquisition will cost removal of cultural and commercial structures, resettlement of affected people, removal of vegetation, relocation of utilities and inconvenience to the local people and animal living in and around the land area to be acquired.

Mitigation

The mitigation measures include –

- Designers should carefully consider alignment and route selection to reduce consequences by avoiding key environmental elements, settlements, etc.
- Land acquisition and forced relocation should be kept to a minimum necessary.
- Enhance or at least restore, the livelihoods of all displaced people in real terms comparable to pre-project levels if avoiding land acquisition and/or involuntary resettlement is not possible.
- To keep the embankment inside the Right of Way (RoW) and reduce the width that must be acquired, protective measures like retaining walls and toe walls are maintained.
- In order to provide adequate compensation and resettlement for the impacted people, a Land Acquisition and Resettlement Plan (LARP) or Land Acquisition and Resettlement Planning Framework (LARPF) must be prepared by social and resettlement specialists.
- People who will be replaced by the project, host communities and nongovernmental organizations should be meaningfully consulted and their involvement in the consultations should be encouraged.

d) Loss of Agricultural Production

Impact

A total of 169.539-acre land will directly be occupied by the project road construction. The land consists of some agricultural lands in which the local people produce vegetables and fruits. Various machineries will be needing extra lands which will hamper crop production for some times. A large amount of land, particularly agricultural land, will be permanently lost, putting a few poor and marginal farmers at risk of losing their food security and livelihoods.

Mitigation

Compensation for victim families, attempts to eliminate negative impacts on agricultural fields, and greater crop output from restricted land will keep the loss to a reasonable level.

e) Removal of Commercial Infrastructure

Impact

The construction of the embankment of the road will require removal of several commercial infrastructures located within the RoW. As a result, commercial infrastructure such as shops, filling station, industries and so on located within the RoW will be essential to relocate and/or demolish. There are also 2 filling stations and commercial structures within RoW of the road alignment. Removal of commercial structure will cause financial loss of the business and the owner(s).

Mitigation

The proper alignment must be carefully chosen in order to ensure that less commercial infrastructure is destroyed. The proposed alignment's RoW has some infrastructure that must be destroyed and where practical, relocated. In this situation, sufficient compensation must be given in the beginning in accordance with national legal frameworks and LARP or LARPF must be prepared. It should be remembered that prior to moving any infrastructure, it must be discussed with the impacted parties.

f) Removal of Physical, Cultural and Other Community structures

Impact

In order to construct the embankment for the proposed Baraiyerhat-Heako-Ramgarh Road project, 27 cultural and community property resources (e.g., mosque, eidgah, grave yard, shrine, school, college, hospital/clinic and so on) located within the RoW will be partially/fully affected. This will cause relocation and/or demolition of the physical, cultural and other community structures.

Mitigation

The alignment choice should be made in a way that has minimal effects on the cultural structure. However, with careful planning, the structures could be relocated or destroyed in

accordance with the current situation. The community must be informed before and relocation should be done according to neighborhood consultation. Before dismantling structures, alternative facilities will be built in accordance the needs of the neighborhood and cost must be covered in accordance with national legislative frameworks.

g) Damage to Public Utilities

Impact

Due to the proposed project, public utilities will be affected producing disruption of public services and inconvenience to the local inhabitants. This influence is transitory and may be characterized as moderately unfavorable in nature.

Mitigation

Mitigation measure will include-

- Where necessary, existing utility infrastructure will be allowed to be relocated as part of the design and budget; and
- Prior to the start of the construction work, any public services (such as water, gas and power/ telephone lines) that may be impacted by the proposed highway will be relocated.

h) Tree Cutting and Wildlife

Impact

Widening the existing two-lane road to four lanes will require the felling of approximately 21,151 roadside and homestead trees under the management of the Forest Department, including a substantial number of trees within the Sal forest areas. The removal of these trees will result in the direct loss of forest biomass and reduce local timber and biomass production potential. It may also cause the loss of associated vegetation, disturb local habitats, and affect wildlife, particularly birds and mammals that depend on trees for food, shelter, and nesting. Furthermore, the reduction in vegetation cover may increase the vulnerability of exposed soil to rainfall-induced erosion, particularly along roadside slopes and embankments. The approval of forest department is attached in Annex.

Table 5-1: List of the affected trees

Local Name	English Name	Scientific Name
Amm	Mango	*Mangifera indica*
Raintree	Raintree	*Samanea saman*
Kodom	Burflower tree	*Anthocephalus indicus*
Tula	Cotton tree	*Bombax ceriba*
Akashiya	Earleaf acacia	*Acacia auriculiformis*
Eucalyptus	Eucalyptus	*Eucalyptus obliqua*
Arjun	Arjun tree	*Terminalia arjuna*
Jam	Jambul	*Syzygium cumini*
Badam	Nut tree	*Arachis hypogra*
Jarul	Giant Crape	*Lagerstroemia speciosa*
Bot	Banyan	*Ficus benghalensis*
Kathal	Jackfruit	*Artocarpus heterophyllus*
Koroi	Lebbek	*Albizia lebbeck*
Jhau	Tamarisk	*Casuarina equisetifolia*
Mahogany	Mahogany	*Swietenia mahagoni*
Total		

(Survey conducted by consultant survey team)

Mitigation

Mitigation measures will include-

- Tree felling shall be restricted to the minimum extent necessary for project implementation, and unnecessary removal of trees shall be strictly avoided.
- Prior to commencing tree-felling activities, RHD shall obtain formal approval from the Forest Department (FD) and comply with all applicable conditions and requirements imposed by the Department.
- A detailed tree-felling inventory, including species, number, size, and location of the approximately 21,151 affected trees, shall be maintained and verified jointly by RHD and the Forest Department before commencement of removal.
- A compensatory plantation programme shall be implemented in consultation with the Forest Department, with appropriate consideration of the number of trees removed, applicable regulatory requirements, and ecological restoration objectives.
- Compensatory plantation and roadside afforestation shall prioritize native and locally suitable species, including fruit-bearing, timber, and other ecologically beneficial trees, to restore vegetation cover and enhance local biodiversity.
- Following completion of embankment construction, exposed slopes and embankment surfaces shall be stabilized through turfing, grass seeding, and appropriate vegetation cover to minimize soil erosion and dust generation.
- RHD shall establish an Environmental and Social Management Team, in coordination with the Forest Department, to oversee tree-felling activities, compensatory plantation, and subsequent monitoring of plantation survival and growth.
- The compensatory plantation programme shall be monitored periodically, and necessary replacement planting shall be undertaken to maintain the required plantation density and survival rate.

i) Change of Local Hydrology/Drainage Congestion

Impact

River ecological, hydrological and morphological aspects have direct bearing on bridge location selection. 9 nos. bridge & 23 nos. box culvert will be constructed in the project area. The dredging and use of dredged material if involved may have its impact in terms of localized sedimentation level increase and dispersion of pollutants present in the dredged material in the river water but the effect is temporary during construction period. All the effects are temporary.

Mitigation

Possible impacts are temporary and minor negative, however following mitigation measures will be incorporated. -

- Proper design of bridges on the river to accommodate design flows;
- Provision of box culverts to provide safety of embankments;
- Provision of sufficient sizes of drains to take design flows;
- Wastes should not be disposed near any water body. All waste depending on its characteristics, should be disposed of in a control manner;

- The dredged material from the riverbank shall be tested for presence of heavy metals and other pollutants before its reuse.

j) Water Bodies and Fisheries

Impact

The Baraiyerhat-Heako-Ramgarh Road will cross 2 rivers and 18 pond. The wetland and ponds on both sides of the road where culture fish farming is a common practice. The bridge construction activities particularly during driving operations will temporarily affect the fisheries at the bridge sites. The water bodies will be directly affected because of earth filling for roads embankment which will cause permanent loss of large amount of fish production.

Mitigation

For any construction/engineering work over the water bodies, proper measures need to be taken to keep the existing water flow as usual as possible. Moreover, to protect the fisheries habitat, erosion and siltation have to be kept in control at bridge and culvert sites. In order to minimize the production loss of fish, production capacity in the existing fish ponds in the CoI can be enhanced through excavating the ponds. Fallow lands can be prepared into fish ponds through excavation work. Farmers can be encouraged to practice of integrated fish farming (e.g., fish farming in the paddy field).

5.3.2 Construction Stage

b) Landscape/Topography

Impact

As a result of construction, topography of the project will be changed. Cutting and dismantling of existing infrastructure will have impact on the topography of the project area. Moreover, excavations of ponds/ditches for the filling materials may affect the nearby agricultural land. Cleaning vegetation from the RoW will cause appearance change of the landscape. This impact is temporary and minor negative in nature.

Mitigation

Mitigation measures for this impact is proper landscaping. Construction camps should be constructed at suitable places to minimize this impact. Vegetation clearing has to be at minimum level as possible. After completion of road construction, trees shall be planted along sections of road near the populous residential areas to mitigate impact of traffic noise to residents living along the road. All the affected areas will be restored to their original levels.

c) Loss Top Soil

Impact

The potential impacts on top soil are-

- Loss of top soil by wind and water erosion;

- Removal of top soil for construction from outside the RoW;
- Compaction of top soil;
- Covering of top soil by project works.

Mitigation

Mitigation measures will include-

- To limit surface runoff and improve percolation via the amount of stored soil, the stockpiles will be constructed on slopes of 2:1;
- Place topsoil stockpiles away from drainage channels and shield them from erosion;
- To stop erosion and soil loss, build silt walls and diversion channels around the topsoil heaps;
- To keep the soils physio-chemical and biological activity in check, spread the topsoil.

d) Hill Cutting

Impact

Uncontrolled hill cutting and excessive excavation may compromise the stability of existing slopes, resulting in steep or unsupported cut faces and increasing the potential for localized slope failure and soil erosion. During rainfall, eroded soil may be transported downslope and deposited on road surfaces, adjoining land, roadside drains, culverts, and nearby watercourses. Sediment accumulation and improper disposal of excavated materials may obstruct drainage structures and natural drainage pathways, reduce their conveyance capacity, and contribute to localized waterlogging. Furthermore, concentrated surface runoff from newly exposed slopes may accelerate soil erosion and increase the risk of localized flooding. Improper stockpiling of excavated materials near hill edges may also increase the likelihood of material sliding downslope.

Hill-cutting activities within or adjacent to the Ramgarh–Sitakunda Reserved Forest area may result in localized vegetation removal and disturbance of existing wildlife habitats. Construction-related noise, dust, equipment movement, and human presence may temporarily disturb nearby wildlife, potentially affecting their normal movement and behaviour. In addition, disposal of excavated materials beyond the approved excavation footprint may cause unintended damage to adjoining forest vegetation and habitats.

The anticipated impacts are expected to be site-specific, localized, and primarily confined to the approved hill-cutting and excavation areas and their immediate surroundings. With appropriate excavation control, slope stabilization, drainage management, and proper handling and disposal of excavated materials, these impacts are expected to remain limited to the designated work areas and can be substantially minimized.

Mitigation

- Undertake hill cutting strictly in accordance with approved engineering drawings, cross-sections, and site-specific geotechnical designs. Excavation shall be carried out in controlled stages to maintain slope stability and avoid excessive or unsupported cut faces.

- Construct suitable toe walls, retaining structures, and properly designed catch-water drains to stabilize cut slopes, intercept surface runoff, and prevent loose materials from reaching the carriageway.
- Install appropriately designed guardrails or crash barriers along exposed road edges and at locations where steep slopes or falling debris may pose risks to road users. These shall serve as traffic-safety measures and shall not replace structural slope stabilization.
- Avoid excavation during heavy rainfall. Construction activities shall be suspended immediately if signs of slope movement, ground cracking, excessive seepage, or other indications of instability are observed.
- Stabilize exposed and completed cut slopes progressively through turfing, hydroseeding, suitable vegetation, erosion-control mats, or other appropriate bioengineering measures to minimize soil erosion and slope deterioration.
- Ensure that completed cut slopes are stabilized progressively and are not left exposed for extended periods during construction.
- Prohibit hunting, trapping, and unnecessary disturbance of wildlife by construction personnel, particularly within and adjacent to the reserved forest area.
- Ensure that excavated materials are not dumped on natural drainage paths, adjacent hill slopes, watercourses, or forested areas. Suitable excavated materials shall be reused in approved construction activities wherever practicable.
- Stockpile excavated materials only in designated and geotechnically stable locations, away from hill edges, drainage channels, and watercourses.
- Provide temporary retaining arrangements, toe protection, and sediment barriers around stockpiles, where necessary, to prevent material movement and sediment runoff.
- Grade and compact temporary stockpiles appropriately to minimize erosion and prevent the displacement of excavated materials during rainfall.
- Regularly inspect and remove accumulated soil, sediment, and debris from drains, culverts, and sediment traps to maintain their hydraulic capacity.
- Ensure that drainage outlets discharge into stable receiving locations through appropriate erosion-protection arrangements, such as riprap, stone pitching, or energy-dissipation structures, to prevent downstream erosion and adverse impacts on adjoining land.
- Install temporary barriers, warning signs, reflective markers, and appropriate traffic-control arrangements around active excavation areas to protect workers and road users.

- Deploy trained flaggers and implement appropriate traffic diversion arrangements wherever excavation activities may interfere with the movement of vehicles and pedestrians.
- Coordinate with the Forest Department during construction to ensure compliance with forest-use permission conditions and to monitor potential impacts on vegetation and wildlife.

e) Dredging and Dredged Materials

Impact

Dredging will be required to source borrow material for the construction of road embankments. It is estimated that about 13,95,168.59 Cum. of embankment materials including dredged sands will be required due to the construction of road embankments. The dredged materials potentially impact the soil quality of nearby agricultural lands, crops and other vegetation. Dredging may cause increased river bank erosion and flood at downstream of the particular river. The quality of the surface water will be degraded because of dredging and spilling/seepage of oil and lubricants from the dredging machines. Local people will be temporarily disturbed due to noise during dredging.

Mitigation

Mitigation measures defined for this activity are-

- Obtaining permits for extraction sites and quantities from appropriate authorities and adhering to the prescribed extraction volume limits per site;
- Conducting survey at each dredging site to establish water quality conditions while the dredging is on-going. Moreover, a Dredged Materials Management Plan (DMMP) should be prepared to manage potential environmental impacts;
- Dredging must not be carried out when the fish are likely to be breeding in the affected surface water bodies or in the period normally from April to August between spawning and the subsequent emergence of juvenile fish.
- Water samples will be collected upstream and downstream of the dredger while in full operation and tested to check all the parameters.

f) Soil Erosion and Siltation

Impact

As the project is located in an area with adequate rainfall which often concentrates in a certain period. Erosion will be taken place at the slope of the proposed road embankment if slope protection measures are not taken immediately. Erosion can be happened at the bridge and culvert construction sites. The silt from erosion if run into the nearby surface water body itself will be affected by increased turbidity and decreased navigation depth. Moreover, if eroded materials run into the agricultural land, then crop production will be hampered.

Mitigation

The following mitigation measures are proposed to alleviate or avoid the impacts-

- In order to reduce scour and promote stabilization, the road embankments and road cuts must be quickly planted with a fast-growing crop and a native seed mixture;
- Provide proper bank protection and structures based on morphological considerations.
- Adequate drain and slope protection measures must be used;
- To prevent erosion, the road must occasionally be sprayed with water and geo-grids must be applied layer by layer for better bonding in the pavement construction.
- When designing the bridge, special care must be made to accommodate the regular canal width without reducing the width of the natural channel.

g) Soil Contamination

Impact

Due to construction of the proposed project, soil contamination may take place around burrow pits, road cuttings, embankments, construction camps, workshop areas, equipment washing yards, asphalt plants, batching plants, fuel and chemical storage areas, spillage of lubricants etc. Soil contamination may affect the road stability in worst cases may reduce the economic productivity of land and biodiversity in the project area.

Mitigation

The following actions must be taken-

- At the appointed location, the construction vehicle must be fueled or repaired/serviced with adequate waste collection and must have a cement floor repairing construction machinery;
- Bitumen, gasoline and chemical storages should be placed on impervious bases inside of embanked areas and secured by fence to reduce soil contamination;
- Waste asphalt must be disposed of in authorized sites, such as borrow pits or unnatural depressions and not within the Row.

h) Air Pollution and Dust

Impact

The construction-related vehicles make up the majority of mobile sources, whereas stationary sources such as; diesel generator sets, construction machinery including compressors and excavation and grading operations are responsible for emissions. Road construction equipment will produce a certain amount Suspended Particulate Matter (SPM) and Respirable Suspended Particulate Matter (RSPM). However, the coarse dust particles that are suspended tend to settle close to the construction site. As a result, there will be impact on the nearby populated area in the closed surrounding area of the construction activity.

Mitigation

Mitigation measures will include:

- Water must be sprayed onto the construction material piles;
- Prior to beginning work, the contractor(s) will deliver a dust control scheme to RHD specifying the steps to be taken to reduce dust production;

- Tire friction caused by vehicle movement should be minimized by the design of the road pavement;
- To lessen dust pollution on the existing road, vehicles delivering loose and fine materials like sand and fine aggregates must be covered;
- Using fabric filters or wet scrubbers to limit the amount of dust emissions at asphalt hot mix and batching facilities;
- For proper emission dispersion, hot mix plants should be placed at least 500 meters distant and one kilometer downward from inhabited regions and equipped with high (30m) stacks;
- Air pollution monitoring shall be carried out as per monitoring plan and corrective action shall be taken in case of deviation.

i) Noise and Pollution

Impact

During construction, noise is likely to be generated form site clearing, excavation, concrete mixing, crushers, piling in bridge construction. The increase in noise levels due to operation of various construction equipment is expected to increase the noise level from 100 dB (A) at a distance of 1 m to 52.1 dB (A) at a distance of 250 m from the sources. The vehicular increase during construction is likely to be limited and may not have any significant contributions to increase in ambient noise level.

Vibrations caused by movements of heavy construction equipment, pile driving operations, operation of crushing, ballasting and aggregating plants will disturb the local residents unless operation times are fixed by discussing with local representatives.

Mitigation

These measures include, but are not limited to the following-

- Using modern machinery and equipment that has a lower noise level guaranteed by adequate in-built dampening techniques and suitable muffling devices;
- According to DoE standards, all powered mechanical equipment and machinery must be equipped with noise-canceling devices, such as mufflers, for efficient sound reduction;
- Equipment and vehicles should be well-maintained and equipped with silencers;
- The noisiest operations ought to be carried out throughout the day;
- The stationary construction apparatus must be kept away from populated areas;
- Personal protection equipment, such as earplugs and earmuffs, should be made available to the workers;
- There will be precautions made to reduce vibration and its impact in locations where there are structures that may be impacted by vibrations as a result of construction activity.

j) Surface Water Quality

Impact

There are large number of ponds and 2 rivers currently being used for unorganized fishing likely to be affected. Project design has made provisions of about 9 bridges and 23 culverts. Hence, no significant impact is anticipated on these water bodies during this phase.

Construction activities (both human and construction waste) may have localized impact in terms increase TSS level in river water. Since this will be a temporary phenomenon, no significant adverse impact is anticipated during these phases.

Mitigation

The Contractor must always try to ensure that none of his operations will pollute water, and he must put in place the necessary controls, which may include but are not limited to the following:

- The Contractor must abide by all national laws and other rules that are currently in effect in Bangladesh with regard to the prevention of water pollution;
- The Contractor must plan and implement strategies for reducing impacts on water quality;
- The Contractor is always responsible for keeping any existing water courses and drains on the properly safe and clear of all debris and excavated materials related to the operation;
- To prevent any effluent from discharging directly into the water body environment during the construction of the bridge piers, bundled site limits must be erected;
- Consolidate and/or cover the earthwork sites where exposed land surfaces are susceptible to runoff, etc.;
- The Contractor is responsible for making sure that no watercourses are directly impacted by rain runoff from the construction sites;
- All drainage facilities and erosion and sediment control structures must undergo routine inspections and maintenance;
- After removing oil/grease and settling suspended materials, wastewater must be collected, reused, and/or disposed of off-site;
- Waste from construction projects must be gathered and recycled whenever possible;
- The locations of the material stockpiles must be far from water bodies and places subject to surface runoff; No equipment or tools may be washed in any water source;
- To stop dripping and leaking oils from entering water bodies via surface runoff, the fuel storage should be located on concrete pads; There should be a strict waste control plan;
- Before being discharged, drainage from vehicle repair bays, plant servicing bays, and vehicle wash bays must pass through a petrol interceptor.
- Weekly check all equipment for prevention of oil and or lubrication leaks and ensure that all these are performed in bounded maintenance and repair areas.

k) Groundwater Quality

Impact

During the construction period, there will likely be a greater need for groundwater for both home and construction-related uses. Arsenic contamination of groundwater is expected to occur across wide areas, therefore employees who consume this water may experience negative health effects. Water availability for people may also be impacted by unrestrained water exploitation. Additionally, if construction waste is not properly managed, leachate will accumulate, permeate through the soil strata and eventually reach the subsurface water table, contaminating it.

Mitigation

Mitigation measures will include-

- Pumping of groundwater should be from deep aquifers of more than 300 m to supply arsenic free water. Safe and sustainable discharges are to be ascertained prior to selection of pumps;
- Tube wells will be installed with due regard for the surface environment, protection of groundwater from surface contaminants, and protection of aquifer cross contamination;
- All tube wells, test holes, monitoring wells that are no longer in use or needed shall be properly decommissioned;
- Install monitoring wells both upstream and downstream areas near construction yards and construction camps to regularly monitor the water quality and water levels;
- Protect groundwater supplies of adjacent lands.

l) Drainage Congestion

Impact

Numerous smaller bridges and culverts have been planned for in the project design which may cause drainage congestion during construction. Therefore, throughout this time, there shouldn't be any noticeable effects on these water bodies. If fill materials dredged from riverbeds are piled up for the construction of an embankment, this could lead to erosion and eventual deposition in nearby crop fields.

Mitigation

Mitigation measures will include-

- Construction shall be so planned that there is no drainage congestion;
- Wastes should not be disposed near any water body;
- All wastes depending on its characteristics, should be disposed of in a controlled manner;
- Adequate cross drainage structure shall be provided to easily drain off water to canal and other lowland areas;
- Drainage works can also be designed with the provision of lower volume of water to drain in other low-lying areas.

m) Clearing of Vegetation

Impact

The project implementation activities at different locations, will invariably involve trees and vegetation to be removed for the widening of the road. The affected trees on both sides of the proposed road alignment have proportionate economic, eco-functional and aesthetic significance. Removal of trees will affect the local ecosystem, habitat of local birds, animals and wildlife.

Mitigation

Mitigation measures will include-

- Road design engineer will select the best option to minimize the tree cutting by selecting road-widening option based on technical consideration;

- RHD will be responsible for the compensatory tree planting program by forming an "Environmental and Social Team" in coordination with the Forest Department (FD). Two tree seedlings to be planted for each tree felled, after the project construction activities are completed;
- The vulnerable medicinal trees will not be felled but uprooted and transplanted in close consultation with the Forest Department. If it is not avoidable to be felled, then it will be planted;
- Flowering and fruiting shrubs can be planted along the road to beautify the landscape. Planting should however be done keeping in view the principles of landscape designing.

n) Terrestrial Fauna

Impact

The vibration of equipment, noise, wastewater and exhausts gas are often considered to be disturbances to animals. These could drive animals away from their current habitats. Cutting down trees will cause damage to the habitat of wild animals. Illegal hunting may also occur and pose the threat to wild animals. Construction work may deteriorate animals' habitat.

Mitigation

The contractor shall-

- Setting up and implementation code of conducts to workers, including no catching or hunting fish and wildlife, and no consumption of wildlife products;
- Provision of environmental training with information on the importance of biological diversity, and its relationships with sustainable development;
- Limit the construction works within the designated sites allocated to the contractors;
- Minimize the tree removal during the bird breeding season;
- Minimize the release of oil, oil wastes or any other substances harmful to migratory birds to any waters or any areas frequented by migratory birds;
- Provide adequate knowledge to the workers regarding protection of flora and fauna, and relevant government regulations and punishments for illegal poaching.

o) Aquatic Species

Impact

The water courses may be contaminated by the pollutants generated from the construction sites and workers camps. Water pollution may change the dominance and the composition of the plankton. Water pollution will reduce species numbers and relative abundances of populations. Construction runoff pollute the watercourses, change the water's pH value and deteriorate the aquatic animals' habitats. This can lead to plankton and benthos deaths and aquatic biomass reduction in the construction areas.

Mitigation

Mitigation measures will include-

- Provision of environmental training with information on the importance of biological diversity, and its relationships with sustainable development;
- Ensure the riverine transports, vessels and ships are well maintained and do not have oil leakage to contaminate river water;
- Emergency oil spill containment plan to be supported with enough equipment, materials and human resources to handle oil spillage;
- Do not dump wastes, be it hazardous or non-hazardous into the nearby water bodies or in the river.

p) Fisheries

Impact

The proposed project will include 9 bridges crossing several waterbodies. The construction of bridges may lead to the loss of fish habitat due to increased turbidity, decreased dissolved oxygen in the water, and reduction of food sources including temporary decline of plankton and benthos organisms, increase in suspended solids. However, these impacts are short-term, reversible, and happen only during the construction phase. Fish populations would be restored after the bridges are built.

Mitigation

Mitigation measures will include-

- Ensure the riverine transports, vessels and ships are well maintained and do not have oil leakage to contaminate river water;
- Emergency oil spill containment plan to be supported with enough equipment, materials and human resources to handle oil spillage;
- Do not dump wastes, be it hazardous or non-hazardous into the nearby water bodies or in the river;
- Inspect any area of a water body containing fish that is temporarily isolated for the presence of fish, and all fish shall be captured and released unharmed in adjacent fish habitat;
- Ensure the earth filling is done in dry season to avoid killing of the floodplain and many burrow pit fishes.

q) Loss of Agricultural Production

Impact

A significant amount of land including agricultural land will be lost permanently; a few poor and marginal farmers will become vulnerable to meet their food security and livelihoods. An irreversible conversion of a large agricultural land into road will happen. Agricultural land will be permanently converted into non-agricultural land. Also, construction works and vehicles will damage the soil quality of the area.

Mitigation

the followings mitigation measures will be ensured:

- Fertile land where two or more crops grow at present or the land which has such potentiality, that land could be avoided. Non-agriculture khash land should be considered on a priority if non-agriculture khash land becomes available;
- Top soils of adjacent land could be preserved as these are most fertile and suitable for crop production;
- Install drainage system to drain out excessive water during rainy season. Irrigation and drainage system should be installed and reconstructed for a sustainable agricultural production;
- Movement of heavy vehicles and machineries should be confined within the right of way;
- Precaution should be maintained to keep soil erosion and flight of dust at a minimum level;
- Shallow and deep tube well could be used for irrigation to cultivate Boro rice and Rabi crops;

- Ensure maximum possible cleanliness of construction activity;
- There might have a provision of cattle pass at a regular interval.

r) Pollution from Wastes

Impact

The construction camps will take a semi-permanent appearance. These wastes will be generated due to construction camps, construction activities and materials used for construction. If inadequate arrangements exist for the disposal of above-mentioned wastes, there will be negative impact on the soil, aesthetic beauty of area and workers health and safety. Possibilities of bitumen and oil leaks spread of contaminants brought through material transport including invasive species, etc.

Mitigation

Mitigation measures will include-

- Develop waste management plan for various specific waste;
- Prepare spill control procedures and submit the plan for RHD approval;
- Train the relevant construction personnel in handling of fuels and spill control procedures;
- Store dangerous goods in bunded areas on a top of a sealed plastic sheet away from watercourses;
- Refueling shall occur only within bunded areas;
- Make available MSDS for chemicals and dangerous goods on-site;
- Place a high emphasis on good housekeeping practices;
- Put containers and drums in temporary storages in clearly marked areas on an impermeable floor that slopes to a safe collection area in the event of a spill or leak;
- Take all precautionary measures when handling and storing fuels and lubricants, avoiding environmental pollution.

s) Asphalt Hot Mix Plant, Rock Crushing and Bitumen Supply

Impact

Rock crushing activities will generate noise and dust, and asphalt hot-mix plant and pavement works will generate gas and odor while compaction of the pavement will also generate noise and dust. It is also possible that soil may be contaminated by oils and chemicals at asphalt/bitumen plant sites, workshop areas, and equipment washing yards. The contamination may limit the future use of the land for agricultural purposes.

Mitigation

The following mitigation measures will be needed-

- Cement batching and aggregate mixing plant will be located as far as possible at least (500 m) from settlements and habitation near the project corridor, or as required by environmental regulations;
- All conditions of DoE permits and local guidelines will be observed;
- Dust suppression equipment will be installed at cement and aggregate mix plants;

- Areas of construction, as well as the haul road, will be kept damp by watering;
- All hot-mix plants, crushers, and batching plants will be located in agreement with the local district or municipality, and installed in a sealed area only after receiving approval from the relevant local authority and DoE;

t) Construction Waste Disposal

Impact

Due to construction activities waste will be generated at construction and contractors camp site. The construction waste will include wastewater, oil spillage from machinery, hazardous waste and solid waste etc. This will result in unhygienic conditions, health risk to work force and general public at the camp site.

Mitigation

Mitigation measures will include-

- Organize disposal of all wastes generated during construction in an environmentally acceptable manner;
- Vehicles transporting solid waste shall be covered with tarps or nets to prevent spilling waste along the route;
- Train and instruct all personnel in waste disposal practices and procedures as a component of the environmental induction process;
- Provide absorbent and containment material (e.g., absorbent matting) where hazardous material is used and stored and personnel trained in the correct use;
- Provide PPE to the construction personnel, appropriate to materials in use;
- Make sure all containers, drums, and tanks that are used for storage are in good condition and are labeled with expiry date;
- Minimize the production of waste materials by 3R (Reduce, Recycle and Reuse) approach;
- Prohibit burning of solid waste;
- Avoid the use of material with greater potential for contamination by substituting them with more environmentally friendly materials;
- Maintain all construction sites in a cleaner, tidy and safe condition.

u) Construction Yard

Impact

The precise locations of construction camps and other facilities such as workshops, equipment washing yards, construction material storage areas, haul routes and disposal sites for construction waste will be finally decided by CSC and RHD in consultation with Contractors. However, the siting of these facilities may cause a number of issues such as loss of plantation and vegetation, permanent physical and visual impact on the area, siltation and pollution risks if construction materials are extracted from the river bed.

Mitigation

The contractor shall-

- Locate the construction camps at areas which are acceptable from environmental, cultural or social point of view;
- Consider the location of construction camps away from communities in order to avoid social conflict;
- Local authorities responsible for health, religious and security shall be duly informed on the set up of camp facilities so as to maintain effective surveillance over public health, social and security matters;
- Adequate housing, safe and reliable water supply for all workers;
- Hygienic sanitary facilities and sewerage system;
- Provide appropriate security personnel (police/home guard or private security guards) and enclosures to prevent unauthorized entry in to the camp area;

v) Labor Impact

Impact

Oftentimes, families rely on the extra income produced by their children in order to sustain their livelihood. Many children are forced to work to help and support the family. In other cases, children are forced to work for a living for themselves because their families abandoned or could not take care of them.

Mitigation

Mitigation measures will include-

- In order to protect children from jeopardy to their health, safety or morals, it should be ensured that children under the age of 18 are not employed for work under the Project;
- According to the International Labor Organization's Minimum Age Convention, 1973, that children at least 16 years of age may be employed for such work on condition that their health, safety and morals are fully protected and that they have received adequate specific instruction. In such cases of employment of children under the age of 18 under the project, an appropriate risk assessment has to be conducted, together with regular monitoring, of their health, safety, working conditions and hours of work;
- It should be ensured that, in connection with the Project, there is no work or service under threat of force or penalty.

w) Occupational Health and Safety (OHS)

Impact

Construction workers are more likely to face occupational health hazards such as minor or major injuries due to lack of general safety requirements and precautions applicable while working. Poorly designed temporary labor camp and sanitation facilities may pose a health threat and nuisance to the workers. Uncontrolled vending of food and drinking water at the work site may also pose a risk with respect to the transmission of contagious diseases Although presently total ratio of the affected people in Bangladesh by HIV/AIDS is far less than 0.1%, however this percentage is slowly being increased due to injection drug users and overseas migrant workers returned to Bangladesh.

Mitigation

Mitigation measures will include-

- Obligatory insurance against accidents for laborers/workers;
- Providing basic medical training to specified work staff and basic medical service;
- Layout plan for camp site, indicating safety measures taken by the contractor, e.g., firefighting equipment, safe storage of hazardous material, first aid, security, fencing, and contingency measures in case of accidents;
- Ear muffs will be provided to the workers doing job in the vicinity of high noise generating machines;
- Provision of adequate sanitation, washing, cooking and dormitory facilities including light up to satisfaction;
- Provision of protective clothing for laborers handling hazardous materials;
- Adequate signage, lightning devices, barriers, yellow tape and persons with flags during construction to manage traffic at construction sites, haulage and access roads.

x) Community Health and Safety

Impact

The construction activities and vehicular movement at construction sites and access service roads may result in road side accidents. This is a temporary and minor negative impact. Quality of groundwater and surface water resources available in the nearby local communities may be affected due to the construction activities, oil spillage and leakage, roadside accidents etc. The labour works with different transmittable diseases may cause spread out of those diseases in the local residents. The burrow pit areas located near the residential, settlements, may cause accident for the people moving near to those areas.

Mitigation

Mitigation measures will include-

- There should be proper control on construction activities and oil spillage leakage of vehicles;
- The labor works with different transmittable diseases should be restricted;
- Efforts will be made to create awareness about road safety among the drivers operating construction vehicles;
- Close consultation with local communities to identify optimal solutions for diversions to maintain community integrity and social links;
- Provision of proper safety and diversion signage, particularly at urban areas and at sensitive/accident-prone spots;
- Eliminating the factors that lead to disease;
- During construction work, pedestrian and vehicular passages should be provided for crossing near settlement;
- Bridges and other structures have to be structurally stable enough to bear maximum ground acceleration recorded for the area in past;
- Use of water should not disturb public water availability. Source of water should be selected carefully.

y) Traffic Congestion/Road Accidents

Impact

The existing NH1 is one of the busiest roads. The influx of heavy construction vehicles used for the construction work may cause road accident if they are not moved following traffic rules. The construction work beside the existing highway road will impede regular movement of the vehicles. The construction workers, pedestrians and onlookers are also prone to accidents. Road accident may also occur at road crossing during construction work.

Mitigation

The Contractor shall-

- Prepare and submit a traffic management plan to the RHD for his approval at least 30 days before commencing work on any project component involved in traffic diversion and management;
- Include in the traffic management plan to ensure uninterrupted traffic movement during construction;
- Provide signs at strategic locations of the roads;
- Restrict truck deliveries, where practicable, to day time working hours;
- Restrict the transport of oversize loads;
- Operate vehicles non-peak periods to minimize traffic disruptions;
- Enforce on-site speed limit;
- Install and maintain a display board at each important road intersection clearly showing the project information in both Bangla and English;
- Identify, evaluate and monitor traffic and road safety risks to Project workers and affected communities, develop measures and plans to address them;
- Provide appropriate training to Project workers on driver and vehicle safety, and ensure regular maintenance of all Project vehicles (owned or leased).

z) Income/Employment

Impact

During construction activities, local unemployed people will get employment and increased income. The immediate benefits to the poorest residents in the project impact areas include employment in construction activities; and subsistence allowances and other benefits under resettlement, and increased income from petty business during construction.

Mitigation

Mitigation measures will include-

- In order to minimize the income loss, contractors as far as practicable will recruit construction workers from amongst the locals where possible, and shall maintain gender equity while employing the locals;
- Priority shall always be given to people from amongst the PAPs and from those unemployed and belong to the lower income group;
- Additional benefits will be derived by setting aside-areas within contractor camps/labor shed for local people to sell their products or to provide additional services to the workers;

- Replacement on a suitable location in a better form will be done with the help and consent of the affected local community;
- Project authorities shall take necessary actions as per the recommendation of Resettlement Plan (RP) and Social Impact Assessment (SIA).

aa) Tree Plantation

Impact

During the construction work of the road the compensatory tree plantation will be conducted which will provide positive impact on the natural environment. Inappropriate selection of tree species and plantation location may not ensure the inherent objective of the tree plantation plan. Moreover, lack of proper care (e.g., watering, securing with fence) by the respective authority will also hinder the process of proper growth of the planted trees.

Mitigation

Mitigation measures will include-

- Since a lot of Shal trees will be cut down so it's necessary to plan the same amount of cut down trees where possible;
- Contractor will be responsible to take measures of protecting the planted seedlings until the seedlings grow enough to survive independently;
- Scope of natural rehabilitation of the local wildlife to the habitat will be created in result of the tree plantation and growth of the vegetation;
- If possible, shifted homesteads may be compensated through providing seedlings;
- Especial care should be taken for biodiversity rich areas during construction.

5.3.3 Specific Impacts due to Bridge Construction

Baraiyeerhat-Heako-Ramgarh road will cross 2 rivers and 18 ponds. Therefore, 9 bridges will be required to construct at different locations. But details impact and mitigation measures for major bridges has been covered in this EIA and additionally this section will discuss some major impacts and mitigation measures due to these bridge constructions.

a) Drainage Congestion

Impact

Inadequate waterway opening of the new bridges will cause drainage congestion and this may cause river bank erosion simultaneously. Run off from storage of construction material near water bodies, or uncontrolled disposal may cause temporary drainage congestion, especially near service areas, and construction sites.

Mitigation

Mitigation measures will include-

- Careful attention has to be given to eliminate negative impacts;

- Adequate number and size of box culverts should be provided to avoid drainage congestion;
- The opening of cross structures including bridges and culverts shall be kept as wide as possible;
- Care should also be taken so that there is no loss to navigability or reduction to water flow in the rivers or canals;
- Proper slope protection measures are required to avoid any drainage congestion caused by siltation/sedimentation from the road embankment;
- The road elevation level in the project area should be designed considering the flood threat levels.

b) Soil Erosion and Siltation

Impact

During construction phase, some trees, shrubs, grasses and will need to be cleared. This may create localized soil erosion problems during the rains. The potential risk of river erosion will increase after implementation of the project if the bridge crossings are provided with waterway width less than the regime width of the river. The project is not expected to worsen the erosion risk particularly in areas where soil and topography are less vulnerable to erosion.

Mitigation

The following mitigation measures are proposed to alleviate or avoid the impacts-

- Adopt good engineering and construction practices;
- Based on morphological consideration provide adequate bank protection and structures;
- The erosion tendency increases at water logged areas as well. So, Adequate drain and slope protection measures shall be applied;
- Particular attention needs to be taken while designing the bridge, which will be provided for the regime waterway width without narrowing the natural channel width.

c) Disruption of Water Transport and Navigation

Impact

The piling, dredging and other construction related operations might disrupt movement of navigational transports in the main river channels. These disruptions however will only be localized and will last during construction only.

Mitigation

The Contractor shall-

- Not obstruct other normal riverine transport while doing riverine transport and works;
- Identify the channel to be followed clearly using navigation aids such as buoys, beacons, and lighting;
- Provide proper buoyage, navigation lights and markings for bridge and dredging works to guide the other normal riverine transport;

- Plan the river transport and transportation of large loads in coordination with BIWTA to avoid traffic congestions;
- Provide signage for river traffic conforming to the BIWTA requirements;
- Position the dredge and pipeline in such a way that no disruption to the channel traffic will occur.

d) Water and Soil Quality

Impact

Spillage of hazardous materials such as fuel, solvents, lubricants and paint by leakage of tanks, careless handling of disposal of hazardous wastes and washing of construction vehicle/equipment in the rivers can cause severe pollution of water (groundwater and surface water) and soil. Soil and water pollution by liquid waste can cause serious impact on the community health and safety and aquatic animals (fish, snakes, frogs etc.) of the rivers.

Mitigation

The contractor should-

- Prepare waste management plan (WMP) and follow it;
- Handling and storage of all the hazardous materials and wastes as well as washing of vehicles/equipment will be organized under strict conditions.

e) Noise and Vibration

Impact

The noise level would increase due to other construction activities, transportation and loading, unloading of construction materials, placing box girders, dredging and electricity generation. It is expected that the noise caused by these activities will still be within acceptable levels. However, in placing the box girders the noise level is expected to exceed DoE specified levels. Movement of the heavy construction equipment and vehicles, pile driving operations, operation of crushing, and aggregating plants, and power generation plants will cause vibration.

Mitigation

The contractor should-

- Prepare proper construction management plan and follow it during construction of the piling activities;
- The workers will be provided with suitable ear muffs and community in the vicinity of will be informed of the period the excessive noise will be generated.

f) River Ecology

Impact

The construction of bridges may lead to the loss of aquatic animal habitat due to increased turbidity, decreased dissolved oxygen in the water and reduction of food sources including temporary decline of plankton and benthos organisms. Increase in suspended solids in the rivers would drive fishes away from the bridge construction sites during the construction phase. Water pollution may change the dominance and the composition of the aquatic species.

Mitigation

Mitigation measures will include-

- The construction works will be limited within the designated sites allocated to the contractors;
- Regular monitoring of the worksite for animals trapped in, or in danger will be done;
- Monitor work areas for endangered reptile and bird species to ensure they are well away from the piling site – scare them away if they are too close to the site;
- Acoustic enclosure will be placed to cover the hammer and the exposed pile to reduce the air noise.

5.3.4 Operation Stage

a) Air Quality

Impact

In the longer run, increased traffic levels and congestion will lead to PM10 and PM2.5 pollution levels above the national/international standards, which may result in causing public health risks, nuisance and other impacts on bio-physical environment. This impact is permanent and positive, in case of improvement of road conditions and minor negative, when traffic volume is increased.

Mitigation

Mitigation measures will include-

- It is proposed to maintain the road conditions especially the shoulders and embankment turning;
- Setting up of a system to monitor air quality along project area in accordance with the applicable standards/limits;
- Roadside tree plantations as applicable and feasible under harsh climatic conditions; plants should be selected in accordance to their ability to absorb emissions;
- Provision of slip road shall be made in urban and congested areas as feasible to separate slow moving and localized traffic;
- Regular road maintenance to ensure good surface condition;
- Best traffic management practices shall also be adopted to regulate the traffic. Enforcement and penalties against traffic rules violators.

b) Noise and Vibration

Impact

During the operational phase, the noise levels are anticipated to increase due to traffic related noise pollution; vibrations from engines and tires and mainly use of pressure horns. The main source of noise during the operation phase is the traffic. It can be estimated that ambient noise level will increase due to the increased traffic.

Mitigation

This impact is permanent and moderate negative in nature. Mitigation measures will include-

- It is suggested that suitable engineering measures such as noise barriers, road pavement design, underpasses/foot over bridges at market areas as feasible should be adopted to minimize the noise generation;
- Additional sound barriers in form of trees and hedges will be discussed with the affected people and planted if agreed;
- It is also suggested that surface roughness of the roads is maintained as per the design characteristics and honking should be discouraged through signboard displays;
- Signs for sensitive zones (health centers / educational institutions etc.) to disallow the use of pressure horns;
- Enforcement and penalties against traffic rules violators; and
- Noise monitoring shall be carried out as per the suggested monitoring plan.

c) Water Pollution (Surface and Groundwater)

Impact

The surface water bodies may get flooded and polluted due to uncontrolled release of contaminated storm-water/road runoff from road surfaces. The pollutants associated with the road-runoff include, hydrocarbons, heavy, corrosive products and suspended solids including insoluble heavy metals as colloidal materials from traffic.

Groundwater may get polluted due to contaminated road runoff on earthen shoulders and embankments planted with grasses. Additionally, the project may lead to faster urbanization near the project area especially along proposed new bypasses/minor route alternatives. This will exert stress on the availability of groundwater in the project area.

Mitigation

The following mitigation measures are proposed to attenuate water quality related impacts-

- Cross slopes and longitudinal drainage will be provided in the design. Well-designed cross drainage structures limit ponding across embankments;
- Proper drainage system with sedimentation ponds and oil separators will be provided to avoid contamination by run-off and oil spills;
- Retention basins with reed beds provided in the design will improve the quality of polluted storm-water/road runoff;
- Drainage and collection structures on the road project, particularly in areas near the river and irrigation canals, shall be designed such that spills of hazardous materials shall not result to contamination of these watercourses;
- Prior to operation, an emergency response plan for spills of hazardous materials and oil will be prepared.

d) Road Accident/Road Safety

Impact

The increased vehicular movement and speed may result in road safety issues like traffic accidents. The accidents may also be due to tiredness. This impact is permanent but

moderately adverse in nature, since the frequency of accidents may be lowered, but their intensity may be quite severe due to enhanced speeds at which vehicles will move.

Mitigation

Mitigation measure will include-

- Strict enforcement of speed limits, installation of speed guns and channelization of traffic with respect to categories and enforcement of penalties for the violators;
- Traffic signs will be provided to facilitate road users about rest areas, eating establishments etc.;
- All the lanes, median, sharp bends will be reflectorized to facilitate travelers in the night time. Proper lighting arrangement on the RoW will be done at required places.

e) Split of Community

Impact

The community and residence will be divided due to the access controlled wide highway. The residential areas and agricultural land of the villages along the road would be divided into fragmented areas due to the proposed improvement. Local resident's daily activities, production activities, etc. would be significantly affected.

Mitigation

Mitigation measure will include-

- During the Detail Design study, efforts have to be paid to avoid split of communities by modification of road alignment.

f) Income/Job Opportunity

Impact

The proposed Project will promote better business opportunities such as new petrol pumps and hotels. Due to increase of traffics, more people will be involved to operate the additional traffics.

Mitigation

Mitigation measure will include-

- As a regulatory authority RHD will monitor of the road;
- Illegal infrastructure development and encroachment along the road have to be checked and controlled by RHD;
- No infrastructure should be built just adjacent to the road.

g) Earth Sliding

Impact

To extend this road, a small portion of hill near the road may need to be cut off to facilitate the construction work or for the road extension purpose which may cause earth sliding due to heavy rain. Geographically, Chattogram falls under a heavy rainfall

zone. During heavy rainfall it may cause earth sliding which may cause danger to the people travelling on the road and may take the lives of the passengers.

Mitigation

Mitigation measures will include-

- Design should be made in such a way that hill cutting can be ignored;
- If there is any requirement to cut any portion of hill near the road, then a proper RCC retaining wall should be used to prevent earth sliding.

CHAPTER 6 ANALYSIS OF ALTERNATIVES

6.1 Introduction

The purpose of this section is to examine feasible alternatives to the project and highlight the benefits of and general rationale for the proposed project that need to be considered against any potential environmental cost. The general principle involved in identifying option(s) to the proposed development is to ensure that the option chosen, which indeed may be the 'non-development' option, would result in optimal social, environmental and capital. In effect the option chosen should be well not only for the developer, but also for the environment and stakeholders in the area. This section is a requirement of DoE and is critical in consideration of the ideal development with minimal environmental disturbance. Feasible land-use options are compared in terms of lowest costs and most benefits criteria: environmental impacts, social acceptability, economics (including productivity of land-use) and design feasibility.

6.1.1 "No-action" Alternatives

The No-project alternative prevents the implementation of the project. This will impede the development of having a better bilateral trade between India and Bangladesh as well as socio-economic advancement of the people in that area. If the project is not implemented, the two-way trade between India and Bangladesh through Sabrum/Ramgarh land port will be hampered. On the other hand, if the project is implemented, this road would broaden bilateral trade between India and Bangladesh. This project would also contribute to establishing road network between the Chattogram port and the Ramgarh land port and open the door for two-way trade between India and Bangladesh through Sabrum/Ramgarh land port. The implementation of the project would establish a safe, developed, time and cost-efficient road transport network between the two countries. Two-way commerce between the two countries would expand which would benefit both India and Bangladesh. This project will be internationally connected to Indian Highway by "Shillong-Agartala-Sabrum Road (NH-8)". This road will meet up traffic demand and would reduce in travel time and congestion. It also hopes to advance the socio-economic conditions of the people in the area. Development of new infrastructure of residential, commercial, social and community is expected to be established alongside the upgraded highway. It will create job opportunities to the local people.

From a purely physical and environmental point of view, the "do-nothing" approach is preferable to any project implementation since it would avoid creation any of the adverse impacts associated with a new project. The "without project alternative" was not acceptable since this will significantly reduce the potential for socio-economic development. The possible two-way trade between India and Bangladesh will be thwarted and so the economic development. It will also cause suffer to the people due to lack of a safe, developed, time and cost-efficient road transport. Despite having great potential, the industrial and commercial growth is retarded mainly due to absence of safe and reliable transportation facility. Therefore, the 'no-build' alternative is unacceptable, and the potential socio-economic

benefits of implementation of such project far outweigh the adverse impacts, all of which can be controlled and minimized to an acceptable level.

6.2 The Alternative Alignments

The proposed road development will be followed along the present ROW and there is no major route alternative since the road will be widened.

CHAPTER 7 STAKEHOLDER AND PUBLIC CONSULTATION

7.1 Introduction

Stakeholder refers to individuals or groups who are affected or likely to be affected by the project (project-affected people) and may have an interest in the project. On the other hand, stakeholders are the essential group and the parallel parties to the proponent without whom the implementation of subprojects are not possible. The term "stakeholder engagement" is a way to describe the process of engagement between a project developer and those potentially affected by the subprojects or way of supporting the implementation. Stakeholder engagement can cover a range of activities and approaches and those are; consultation, engagement, external relations, information disclosure and dissemination, community participation etc.

As a part of updating EIA, stakeholders' consultation and key informant interviews (KIIs) were carried out (from 16thMarch 2022 to 27th March 2022) in the project influence area. Through different KIIs, opinion & recommendation of different stakeholders were fined out and their concerns/recommendation were documented & duly reflected in this EIA. The public consultations were carried out in public places with prior notice to the people while KIIs were carried out with officials and influential persons in the project surrounding areas. Further stakeholder consultations will be conducted in accordance with Rule 16 of the Environment Conservation Rules (ECR), 2023, following submission of the draft EIA report to the Department of Environment (DoE).

7.2 Stakeholder Identification and Analysis

A stakeholder is defined as 'a person, group, or organization that has a direct or indirect stake in a project/organization because it can affect or be affected by the Project or its Proponent's actions, objectives, and policies'. Stakeholders may vary in terms of degree of interest, influence, and control they have over the Project or the proponent. In the present study, all the stakeholders have been primarily synthesized into two categories that have been identified as:

- Project-affected parties: those who are or likely to be affected by the project, and
- Other interested parties: who may have an interest in the project and who could, for example: Influence the opinions of affected parties either positively or negatively, or affect the implementation process or the sustainability of the project's outcomes

7.3 Information Disclosure and Consultation

A combination of mixed methods of information disclosure and consultation process was adopted at this stage of EIA preparation. The method selected for consultation was basically designed keeping in mind the profile of the stakeholders, type of information desired and level of engagement required. In each consultation session, participants took active part in the

discussion and expressed their opinion/recommendation for betterment of the project. The methods used in the consultation process were:

- Focus group Discussion (FGD)
- Public/Community Consultation
- Walk in Interview during Survey
- Key Informants Interview (KII)

The consultation and information disclosure were held in the easily accessible public location in the zone of influence with prior notice to the stakeholders through personal contact, announcement in the public places. In all occasions the date, time and venue of the consultation was decided by the stakeholders keeping in view their prior engagement and availability. KIIs were done by visiting the offices/place of the key informants.

7.3.1 Focus Group Discussion

Discussions were held with the affected communities and businesses at Mirer Sorai, Fotikchori and Ramghar areas under five unions and pouroshova. Date, location and the number of participants of each discussion is listed in **Table 7-1**. During the discussion participants freely discussed all issues and photo documented. FGDs were attended by a total of 52 people FGDs in resettlement sites were focused on the RS design requirements and community involvement in the management during construction and O/M. **Figure 7-1** shows the focus group discussions at various locations.

Table 7-1: List of the FGD meetings

Sl. No.	Date	Location	Participants
01	18.03.2022	Noyatila, Koraerhat Union	10
02	21.03.2022	Yeako Bazar, Bhujpur,	12
03	20.03.2022	Baroiyarhat Pouro Shova,	11
04	23.03.2022	Mohamoni, Ramgor,	10
05	27.03.2022	Taltola, Ramgarh,	9









চেয়ারম্যান




Figure 7-1: FGD with different local stakeholders at different affected area.

7.3.2 Stakeholder Consultation Meeting

The stakeholder consultation meetings were held at Korerhat Union and Baganbazar Union with local community including farmers, businessmen, members of union parishad, workers etc. to disseminate project information and seek their opinion. All level stakeholders expressed satisfaction about the project with a hope to see local as well as regional development. At the same time, they expressed concerns about ultimate fate of the local people particularly poorer section of the people if they are not protected by the project and compensated/rehabilitated in case of adverse impacts on them due to the project.

Table 7-2: Details about the consultation meetings

Date of the meeting	Location	Category of participants
24.03.2022	Korerhat Union	Chairman, Teacher, Affected land owner, Businessman, Farmers
25.03.2022	Baganbazar Union	Members of Union Parishad, Businessman,

7.4 Summary of FGD and Stakeholder Consultation Meeting for EIA

A total of five FGDs and two locations of consultation meetings were held in the influenced area with prior notice to the people by public announcement. Local participants took active part in the FGD and raised their issues freely. Representatives of the Union Parishad (Chairman and Member) also attend public consultation meetings.

In the consultation meetings, people were briefed about the project including potential benefits, positive and adverse impacts and mitigation measures as well. People also raised some issues related to the probable impacts on them considering other similar development all over the country. They also suggested/demanded some mitigation measures for their existence and sustainable development.

Overall concerns and outcome of the FGD and public consultation meetings:

- Participants expressed concerns regarding potential environmental and social impacts, particularly hill cutting, tree removal, slope instability, soil erosion, drainage congestion, dust, and noise during construction.
- Emphasized the need for controlled hill cutting, slope stabilization, proper drainage facilities, and erosion and sediment control measures.
- Recommended compensatory tree plantation, re-vegetation of disturbed slopes, and protection of nearby vegetation and natural resources.
- Suggested appropriate construction-site management to minimize dust, noise, traffic disruption, and disturbance to nearby communities.
- Highlighted the importance of maintaining road safety and ensuring uninterrupted access for local communities during construction.
- Generally acknowledged the project's potential benefits in improving regional connectivity, transportation, trade, tourism, and local economic activities.
- Recommended proper implementation of the mitigation and monitoring measures outlined in the EIA's Environmental Management Plan (EMP) to minimize adverse impacts.





Public Consultation with local Stakeholder at Korer Hat Union Complex, Misorai, Chattogram.





Public Consultation with local Stakeholder at bagan Bazar Union Complex, Fotikchori, Chattogram.

Figure 7-2: Community consultation Meeting

7.5 Key Informant Interviews (KII)

Key Informant Interviews (KIIs) with concerned departments were carried out (during 24 -25 March, 2022) for documenting their opinion, concerns and recommendation about the proposed project. A total of nine (09) KIIs were conducted during preparation of this EIA with government officials of various departments pertinent to the project activities.

Table 7-3: List of the Key Informants

UNO, Fotikchori Upozilla, Chattogram	Fisheries Officer, Fotikchori Upozila, Chattogram.
Sub-Assistant Agriculture Officer, Fotikchori Upozila, Chattogram.	Assistant Officer of Reserve Forest Korer Hat, South Forest Zone, Chattogram
Research Officer, Heako, Fotikchori, Chattogram.	UNO, Mirer Sorai Upozilla, Chattogram.
Sub-assistant Agriculture Office, Mirer Sorai Upozilla, Chattogram	Fisheries Officer, Mirer Sorai Upozilla, Chattogram



KII with UNO, Fotikchori Upozilla, Chattogram.



KII with Fisheries Officer, Fotikchori Upozila, Chattogram.



KII with Sub-Assistant Agriculture Officer, Fotikchori Upozila, Chattogram.



KII with Assistant Officer of Reserve Forest Korer Hat, South Forest Zone, Chattogram



KII with Research Officer, Heako, Fotikchori, Chattogram.



KII with UNO, Mirer Sorai Upozilla, Chattogram.



Note : KII with Sub-assistant Agriculture Office, Mirer Sorai Upozilla, Chattogram



Note: KII with Fisheries Officer, Mirer Sorai Upozilla, Chattogram

Figure 7-3: Key Informant Interview (KII) of the project area

7.6 Summary of FGD and Stakeholder Consultation Meeting for EIA

The followings are the summary of the KIIs conducted in the project area:

- Suggested restricting hill cutting and tree removal to the approved project boundaries and minimizing unnecessary vegetation clearance to reduce environmental disturbance.
- Recommended undertaking hill excavation in controlled stages, maintaining stable slope profiles, and providing retaining structures, toe walls, and other appropriate slope protection measures to prevent slope failure and soil erosion.
- Suggested installing adequate drainage and sediment control facilities to maintain natural water flow and prevent soil runoff and sedimentation in adjacent land and water bodies.
- Recommended compensatory tree plantation, re-vegetation of disturbed slopes, and coordination with relevant forestry and environmental authorities to ensure compliance with applicable regulations.

- Emphasized regular site inspections, environmental monitoring, and supervision to ensure the effective implementation of mitigation measures throughout construction.
- Recognized the project's potential to improve regional connectivity, facilitate cross-border trade, and promote local socio-economic development, provided that environmental impacts are appropriately managed.
- The interviewees indicated that the project should implement the mitigation and monitoring measures prescribed in the EIA's Environmental Management Plan (EMP), which has been designed to address anticipated environmental and social impacts during the pre-construction, construction, and operation phases.

CHAPTER 8 ENVIRONMENTAL MANAGEMENT AND MITIGATION PLAN

8.1 General

Environmental mitigation measures and environmental monitoring requirements will be implemented through an Environmental Management Plan (EMP). The EMP provides details of the environmental impacts, environmental mitigation measures, environment monitoring requirements, and environmental supervision responsibilities.

This section provides an approach for managing and monitoring environment related issues for environmental management and resource allocations to be carried out by the Roads and Highways Department (RHD) for mitigating negative impacts of the proposed Project.

8.2 Objectives of the Environmental Management Plan

The main objectives of the EMP for the construction of the Baraiyerhat-Heako-Ramgarh Road project are:

- Define the responsibilities of the project proponents in accordance with the three project phases (design, construction and operation);
- Facilitate the implementation of the mitigation measures by providing the technical details of each project impact, and proposing an implementation schedule of the proposed mitigation measures;
- Define a monitoring mechanism and identify monitoring parameters to ensure that all proposed mitigation measures are completely and effectively implemented;
- Identify training requirements at various levels and provide a plan for the implementation of training sessions;
- Identify the resources required to implement the EMP and outline corresponding financing arrangements; and
- Providing a cost estimate for all proposed EMP actions.

8.3 Environmental Management Plan

Mitigation measures for each of the impacts listed in the **Table 8-1**. Responsible institutions/departments for the implementation and supervision of each of the environmental issues have also been illustrated. Mitigation measures have been suggested based on the knowledge of the Environmental Specialist, suggestions of the stakeholders collected during public consultation, and opinions from other relevant specialists.

The mitigation measures will be considered successful when comply with the Environmental Quality Standards (EQS), policies, legal requirements set by DOE and other relevant GOB

organizations. In absence of DOE's own EQS, other relevant international or other recognized organization's quality standard will have to be followed.

Table 8-1: Environmental Management Plan-Mitigative Measures

Environmental Issues	Environmental Impacts	Mitigation Measures	Location	Who will Implement	Who will Supervise
Pre-Construction Stage					
1 Landscape/ Topography	• Change in topography due to construction-related structures such as interchanges, bridges, embankments etc.; and • Visual changes to topography.	• The aesthetic elements (such as plantation) should be incorporated in the design; • Large filling and deep cuts would be avoided, when possible, with the proper alignment planning; • The intersections would be properly designed so as it can be conformable with the existing landform topographically to the extent possible; • The toll plaza would be reasonably located with the structure and color conformable with the surroundings.	Throughout the alignment, at intersection sites.	Design consultants (DC)	PIU
Hill Cutting	• The proposed excavation is expected to generate localized impacts, particularly related to slope stability, soil erosion, sediment transport, drainage obstruction, dust generation, and potential damage to adjacent vegetation.	• Clearly demarcate the approved hill-cutting locations, excavation boundaries and limits of work before commencement of excavation. Ensure that no excavation or vegetation clearance takes place beyond the approved areas. • Identify locations requiring retaining structures, guard rail, toe protection, rock bolts, wire mesh or other stabilization measures, as appropriate, based on the geotechnical assessment and approved design. • Identify suitable and stable locations for temporary stockpiling, reuse and final disposal of excavated materials. Ensure that designated locations are away from hill edges, natural drainage channels, watercourses and sensitive forest areas. • Prepare and submit a site-specific hill-cutting method statement detailing the excavation sequence, equipment, slope protection measures, erosion and sediment control, and emergency response procedures for review and approval by the CSC and RHD.	Throughout the alignment of hill cutting	Contractor, CSC	RHD

Environmental Issues	Environmental Impacts	Mitigation Measures	Location	Who will Implement	Who will Supervise
		• Coordinate with the Forest Department to confirm the approved limits and conditions for the use of reserved forest land. Clearly identify vegetation and trees to be retained and restrict clearance to the areas authorized for project activities.			
2. Climate	• The project area is located in high rain and temperature area.	• Road should be designed considering all the climatic factor.	Throughout the alignment	Design consultants (DC)	PIU
3. Land Acquisition and Resettlement	• Acquisition of 68.61-hector land. • Resettlement of Affected Persons (PAPs).	• Land acquisition and resettlement plan has to be prepared according to the national legal frameworks in order to deliver proper compensation and resettlement of the affected people; • Careful alignment and route selection by the designer to minimize resettlement; • Acquire minimal area of land that meets the requirement of the proposed road improvement; and • Allocation of proper compensation according to resettlement plan.	Throughout the alignment	PIU/Deputy Commissioner (DC)/NGO	PIU and Construction Supervision Consultants (CSC)
3. Agricultural Production Loss	• To widen the existing road, production of various crops from this agricultural land will be permanently lost.	• A compensation program for creation of employment for victim family, initiatives to reduce negative impact on agricultural lands and increased crop production from limited land will keep the loss at an agreeable limit.	Throughout the alignment	PIU/DC/NGO	PIU and Construction Supervision Consultants (CSC)
4. Removal of Commercial Structures	• Commercial structures are located within the ROW which will be directly affected.	• The Project Affected People (PAPs) must be informed through notice in time as though they can get enough time to make plan for relocation/shifting; and • The PAPs will have to be properly compensated and relocated as per the RP.	Along the alignment at sites identified in the RP.	PIU/DC/NGO	PIU and CSC
5. Removal of Physical, Cultural and	• 27 cultural structures are located within ROW.	• The people using the infrastructure must be informed prior to removal and/or relocation; and	Along the alignment at CPRs sites	PIU/DC/NGO	PIU and CSC

Environmental Issues	Environmental Impacts	Mitigation Measures	Location	Who will Implement	Who will Supervise
Other Community Structures		• Removal and/or relocation of community structures will have to be executed after discussion with the local people/users/associated stakeholders.	identified in the RP.		
6. Damage to Public Utilities	• Utility lines will have to be moved disrupting services.	• Provision in the design and budget for the relocation of the existing utility infrastructures, whenever required; • All public utilities likely to be affected by the proposed project will be relocated before the actual commencement of the construction work. • Utilities will only be removed and relocated with proper agency approvals and permission; • If utilities are damaged during construction, repairs will be arranged immediately at the contractor's expense; • Reconnection of utilities will be completed at the shortest practicable time before construction commences.	Along the alignment.	PIU /DC/ PDB/BTCL/ Contractor	PIU and CSC
7. Tree Cutting and Wildlife	• A total of 21,151 trees of the forest department will be cut down; • Loss of habitat of some wildlife in relation to the wetlands, trees and vegetation; and • Clearance of vegetation on the RoW along the alignment will cause permanent and/or temporary dislocation of some wildlife because of disturbance on their habitat;	• Get approval from the forest department for clearance of vegetation; • Prior notice to the owners of the trees and ensure proper compensation to the affected people according the RAP; • During cutting of trees cautious observation is essential regarding smooth and safe relocation/migration of wildlife (if any) and it has to be ensured that no wildlife becomes hurt during tree cutting; • A total of minimum 3 time of saplings against one felled down trees will be planted during operation stage (preferably during monsoon period); • If a tree of rare species is growing within the RoW and is required to be removed, it will not be felled but	Along the alignment	FD/ PIU /DC	PIU, MoEF, and CSC

Environmental Issues	Environmental Impacts	Mitigation Measures	Location	Who will Implement	Who will Supervise
	• The birds and its nest on the trees will be directly affected.	uprooted and transplanted in close consultation with the Forest Department;			
8. Change of Local Hydrology / Drainage Congestion	• Diversion across the 9 bridges and 23 culverts construction; and • Temporary change in local hydrology.	• Design of diversion and approach road have to be designed in a way that does not bring any short/long term hydrological change and/or drainage congestion; • Wastes have to be disposed in controlled manner at designated site only according to the characteristics of the waste.	Bridges and embankments as well as at culvert construction sites.	PIU / Design Consultant (DC)	PIU, BIWTA, BWDB and CSC
9. Water Bodies and Fisheries	• Pile driving and dredging for the construction of 9 bridges and 23 culverts will force to migrate the fisheries and other aquatic species.	• Proper compensation to the affected people who will lose their culture fisheries ponds; • Flow of water in the rivers must be undisturbed as possible; • Erosion and siltation have to be prevented at bridge and culvert construction site; • In order to minimize the production loss of fish, production capacity in the existing fish enriched ponds in the CoI can be enhanced through excavating the ponds.	Along the alignment, river, ponds and roadside burrow pit site areas.	PIU /DC/NGO	PIU, DOF and CSC
Construction Stage					
1. Landscape/ Topography	• Cutting trees and dismantling of existing infrastructure will cause landscape change; • Road embankment will cause landscape change.	• Proper landscaping; • Construction camps should be constructed at suitable place to minimize this impact; • Vegetation clearing has to be at minimum level as possible; • All the affected areas will be restored to their original levels.	Embankment areas of the proposed alignment area as well as at all construction camp area.	Contractor	PIU, and Construction Supervision Consultant (CSC)

Environmental Issues	Environmental Impacts	Mitigation Measures	Location	Who will Implement	Who will Supervise
2. Hill Cutting	• Uncontrolled hill excavation, inadequate slope protection, soil erosion and sedimentation, and insufficient forest and wildlife protection may adversely affect slope stability, surrounding vegetation, and local ecosystems in the hill-cutting areas.	• Carry out hill cutting strictly within the approved boundaries and in accordance with the approved designs and method statement. Conduct excavation in controlled stages using appropriate equipment and avoid creating excessively steep or unsupported cut faces. • Avoid excavation during heavy rainfall and suspend work where cracks, ground movement, seepage or other indications of slope instability are observed. Resume work only after the site has been inspected and necessary corrective measures have been implemented. • Install and maintain temporary catch drains, diversion channels, silt traps and sediment barriers to control surface runoff and prevent eroded soil from entering adjoining land, roadside drains and nearby watercourses. • Maintain existing natural drainage paths and ensure the proper functioning of roadside drains and culverts. • Apply suitable erosion-control measures to exposed slopes, including topsoil placement, turfing, hydroseeding, erosion-control mats and plantation of native vegetation, as appropriate to the site conditions and approved design. • Reuse suitable excavated materials in the project, wherever technically feasible. • Restrict construction activities to approved areas and prevent unauthorized tree felling, vegetation clearance, hunting, trapping or disturbance of wildlife. • Upon completion of excavation and related works, remove temporary structures and surplus materials, restore disturbed areas through grading and	Hill cutting areas along the road alignment	Contractor	PIU, and Construction Supervision Consultant (CSC)

Environmental Issues	Environmental Impacts	Mitigation Measures	Location	Who will Implement	Who will Supervise
		revegetation, and ensure that drainage facilities remain functional.			
3. Loss of Top Soil	• Construction activities and wind may lead to loss of topsoil; • Compaction of topsoil due to vehicular and pedestrian movement; • Covering of top soil by project works; • Clearing topsoil in proposed embankment area can lead to loss of nutrient.	• The stockpile slope to be no steeper than 2 (H):1 (V) to reduce surface runoff and enhance percolation through the mass of stored soil; • Minimize erosion potential and weed species invasion by establishing a healthy plant cover; • Keep soil storage periods as short as possible; • Locate topsoil stockpiles outside drainage lines and protect stockpiles from erosion; • Construct diversion channels and silt fences around the topsoil stockpiles to prevent erosion and loss of topsoil; • Limit equipment and vehicular movements to within the approved construction zone; • Fertile soil (or top soil) shall be distributed free to local people who need it for their own purpose.	Embankment areas of the proposed alignment area as well as at all construction camp area.	Contractor	CSC
4. Dredging and Dredged Materials	• Riverbank erosion and flood at downstream; • Dispersion of sediments and release of high sediment laden runoff from the placement sites.	• Dredging must not be carried out when the fish are likely to be breeding in the affected surface water bodies; • Avoid sensitive areas (bird habitats, and fish spawning areas). No dredging will be carried out within 1 km from these sensitive areas; • Prior to start dredging and during dredging, quality of river water and river bed dredged materials of the selected rivers need to be tested by the contractor.	Dredging sites and dredge material placement sites.	Contractor	CSC
5. Soil Erosion and Siltation	• Soil erosion due to construction activities, earthworks, cut and fill	• The Contractor is required to reuse the excavated soil as much as possible unless the soil is considered not suitable for filling;	At all work sites, in the impact corridor,	Contractor	CSC

Environmental Issues	Environmental Impacts	Mitigation Measures	Location	Who will Implement	Who will Supervise
	operations and from stockpiles; and • Increase of the surface water turbidity and disruption of usual photosynthesis and fish spawning process.	• Minimize surface excavation works during the rainy season where practicable; • Slope protection measures through turfing and bioengineering work; • Drainage system will be improved to ensure that storm water be drained smoothly and quickly, and the working surface will be covered; • The material stockpile sites shall be far away from surface water bodies and areas prone to surface run-off; • Cut-off drains should be built near sensitive areas to catch rainwater before it reaches the critical areas; • Channels, earth bunds, netting, tarpaulin and or sand bag barriers shall be used on site to manage surface water runoff and minimize erosion.	including at cut areas.		
6. Soil Contamination	• Contamination of nearby agricultural land if dredged material is contaminated; • Dumping of construction debris on fields adjoining the acquired areas, may lead to impairment of soil for agriculture, especially when the nearby areas to the alignment is largely agriculture.	• Handling of bitumen, fuel and chemicals at designated site in the construction yards only; • The movement of construction vehicles, machinery and equipment will be restricted to the corridor or identified route; • The unusable, non-saleable, non-hazardous construction waste shall be disposed of in the properly delineated places; • The compacted land is restored for agricultural use; • The construction vehicles shall be fueled or repaired/serviced at the designated place with proper arrangement of waste collection and disposal. • Soil contamination by bitumen, fuel and chemical storages shall be minimized by siting them on an impervious base within an embanked area and secured by fencing.	At all work sites, in the impact corridor, including at cut areas.	Contractor	CSC

Environmental Issues	Environmental Impacts	Mitigation Measures	Location	Who will Implement	Who will Supervise
		• The disposal of waste asphalt shall be made in approved locations.			
7. Air Pollution and Dust	• The ambient levels of COx, NOx, SOx, PM2.5, and PM10 may increase during construction phase; • Flow of particulate matter from uncovered construction materials carrying vehicles; and • Emissions of air pollutants/GHGs from asphalt plant, machines/engines and firing for bitumen melting.	• Earth, rock or debris shall not be deposited on public or private land; • Provide water spray vehicles to water the unpaved ground, storage piles and other areas where airborne dust may originate; • Trucks transporting construction materials should meet allowable exhaust gas emission standards and should be carefully covered; • Site for stockpiling soils and sand should be located far more than 500m from the populous residential areas; **Measures to control air pollution at concrete batching pollution at concrete batching plant, asphalt melting stations etc.;** 1. Concrete batching plants, crushing plant sites and their ancillary areas shall be frequently cleaned and watered to minimize any dust; 2. Dry mix batching shall be carried out in a totally enclosed area with exhaust to suitable fabric filters; 3. A suitable air pollution control system shall be installed and operated whenever the batching plant is in operation; 4. All stockpiles of sand and aggregate within the batching plant site shall be enclosed on three sides with geotextile sheets; 5. The asphalt melting station should be equipped with flue gas control device, operation of asphalt melting will be in enclosed mode;	At all work sites, in the impact corridor.	Contractor	CSC

Environmental Issues	Environmental Impacts	Mitigation Measures	Location	Who will Implement	Who will Supervise
		6. Cement and other such fine-grained materials delivered in bulk shall be stored in closed silos fitted with a high-level alarm indicator. **Measures to control air pollution at construction site:** 1. Use temporary barriers to control dust around the construction sites near the populous residential areas; 2. All vehicles shall have their engine turned off while parked on the site; 3. Construction machinery should be located as far as possible from the construction site boundary; 4. Construction roads should be paved with gravel or asphalt to reduce generation of air-borne dust, and mitigate impacts to residential areas; 5. All roads within the construction sites and roads leading to the sites shall be sprayed by using water.			
7. Noise and Vibration	• Generation of noise due to project activities (e.g., movement of vehicle, construction work, maintenance etc.); • Movement of the heavy construction equipment and vehicles, pile driving operations, operation of crushing, ballasting and aggregating plants, and power generation plants will cause vibration.	• The Contractor shall abide by the provisions of the Specifications of Contract regarding environmental protection and DOE regulations (≤60 dB levels at mosque, school, populated area and other sensitive sites); • The Contractor shall at its own expense take all appropriate measures to ensure that work carried out (including works by sub-contractors), whether on or off the site, will not cause any unnecessary or excessive noise; • Construction activity near residential areas should be scheduled in daytime only; • The Contractor shall be responsible for repairing any damage caused as a result of vibrations generated from or by the use of his equipment, plant; • All equipment, engines and motors shall be equipped with proper silencers or mufflers during construction;	Sensitive sites within 100 m of ROW in the vicinity of the sensitive receptors.	Contractor	CSC and DOE

Environmental Issues	Environmental Impacts	Mitigation Measures	Location	Who will Implement	Who will Supervise
		• Construction equipment should be well maintained to keep it in a best operating conditions and lowest noise levels; • Restrict long heavy vehicles and speed in the areas near the populous areas; • The use of temporary noise barriers, or acoustic screens or enclosures shall be properly examined at the road sections close to the populous residential houses to shield residences from road traffic noise; • For workers working with excessive noisy machines should be provided ear protection.			
8. Surface Water Quality	• During the construction phase, untreated wastewater from construction sites would pollute water bodies; • Water pollution may cause damage to the breeding and spawning of fish and may pose threat to other aquatic species; • Oil leakage from the operation of machinery during the bridge construction may also cause river water pollution;	• The Contractor shall comply with the national legislation and other regulations; • The Contractor shall devise and arrange methods of working to minimize water quality impacts to the satisfaction of the CSC; • The Contractor shall at all times ensure that all existing water courses and drains within, and adjacent to, the Site are kept safe and free from any debris and any excavated materials arising from the Works; • For construction of the bridge piers bundled site boundaries shall be established to prevent any wastewater discharging directly to the water body environment; • The Contractor shall ensure that rain run-off from the construction sites is not deposited directly into any watercourse or the coastal environment; • Wastewater shall be collected, re-used and/or disposed of off-site after oil/grease removal and settlement of suspended solids before disposal;	Along the alignment and bridges/culvert's locations	Contractor	CSC and DoE

Environmental Issues	Environmental Impacts	Mitigation Measures	Location	Who will Implement	Who will Supervise
		• Construction wastes shall be collected and re-used wherever possible; • The Contractor shall ensure that no tools or machinery are washed in any water source or areas that drain into an existing watercourse or to the coastal environment; • The Contractor shall weekly check all equipment to ensure that all equipment oil and lubrication replacements are performed only in bounded maintenance and repair areas.			
9. Groundwater Quality	• Spillage of oil and chemicals on the soil surface may percolate into the local groundwater aquifer and pollute the groundwater; and • Extraction of excessive groundwater from the locality in the project area for construction work may decrease the level of groundwater table.	• Pumping of groundwater should be from deep aquifers of more than 300 m to supply arsenic free water; • Tube wells will be installed with due regard for the surface environment, protection of groundwater from surface contaminants, and protection of aquifer cross contamination; • All tube wells, test holes, monitoring wells that are no longer in use or needed shall be properly decommissioned; • Install monitoring wells both upstream and downstream areas to regularly monitor the water quality and water levels; • Protect groundwater supplies to adjacent lands.	Throughout the alignment, especially where the pile placed to depths ≥ 30 m, and where any new wells were dug.	Contractor	CSC and DoE
10. Drainage Congestion	• Construction of bridges and culverts over the waterways may cause drainage congestion; and • Erosion from embankment may also cause drainage congestion through siltation/ sedimentation.	• Diversion over the waterways during construction of bridges and culverts shall be made in such a way that does not cause any localized drainage congestion; • Proper slope protection on the embankment shall be ensured; • Regular cleaning of channels to avoid choking; • Provide alternative drainage for rainwater if the construction works/earth-fillings cut the established drainage line;	Throughout alignment, earthworks inspection at all work camps and major construction sites such as bridges and	Contractor	CSC

Environmental Issues	Environmental Impacts	Mitigation Measures	Location	Who will Implement	Who will Supervise
		• Rehabilitate road drainage structures immediately if damaged by contractors' road transports; • Construct wide drains instead of deep drains to avoid sand deposition in the drains that require frequent cleaning; • Regularly inspect and maintain all drainage channels to assess and alleviate any drainage congestion problem.	embankments as well as at culvert construction sites.		
11. Vegetation	• considerable flow of workers and trucks in the site will lead to the reduction of vegetation cover; • The dust accumulating on the leaves surface of plants will prevent the photosynthetic function; • The lime and cement will produce hardpan soil if they are dumped to the soil.	• Control noxious weeds by disposing of at designated dump site or burn on site; • Clear only the vegetation that needs to be cleared in accordance with the plans; • Don't burn off cleared vegetation; • Return topsoil and mulched vegetation to approximately the same area of the roadside it came from; • Avoid work within the drip-line of trees to prevent damage to the tree roots and compacting the soil; • Ensure excavation works occur progressively and re-vegetation done at the earliest; • Supply appropriate fuel in the work camps to prevent fuel wood collection.	Along the alignment, trees cutting, camp areas and River site areas.	Contractor	CSC
12. Terrestrial Fauna	• The vibration of equipment, noise could drive animals away from their current habitats; • Cut down trees could cause damage to the habitat of wild animals;	• Setting up and implementation code of conducts to workers, including no catching or hunting fish and wildlife, and no consumption of wildlife products; • Provision of environmental training to workers with information on the importance of biological diversity, and its relationships with sustainable development; • Limit the construction works within the designated sites allocated to the contractors;	Along the alignment, trees cutting, camp areas and River site areas.	Contractor	CSC

Environmental Issues	Environmental Impacts	Mitigation Measures	Location	Who will Implement	Who will Supervise
	• Illegal hunting may also occur and pose the threat to wild animals.	• Minimize the tree removal during the bird breeding season; • Minimize the release of oil, oil wastes or any other substances harmful to migratory birds to any waters or any areas frequented by migratory birds.			
13. Aquatic Species	• Water pollution may change the dominance and the composition of the plankton. Water pollution will reduce species numbers and relative abundances of populations; • Construction materials runoff will change the water's pH value and deteriorate the aquatic animals' habitats.	• Provision of environmental training with information on the importance of biological diversity, and its relationship with sustainable development. • Do not dump wastes, be it hazardous or non-hazardous into the nearby water bodies or in the river; • Use pingers upstream and downstream to chase away aquatic species; • Monitor area for these creatures to ensure they are well away from the piling site – scare them away if they are too close to the site using pingers.	Water bodies, wetlands and River site areas along the alignment.	Contractor	CSC
14. Fisheries	• The construction of bridges may lead to the loss of fish habitat due to increased turbidity, decreased dissolved oxygen in the water, and reduction of food sources including temporary decline of plankton and benthos organisms.	• Ensure the riverine transports are well maintained and do not have oil leakage to contaminate river water; • Make an emergency oil spill containment plan to be supported with enough equipment, materials and human resources; • Do not dump wastes, be it hazardous or non-hazardous into the nearby water bodies or in the river; • Inspect any area of a water body containing fish that is temporarily isolated for the presence of fish, and all fish shall be captured and released unharmed in adjacent fish habitat.	Water bodies, wetlands and River site areas along the alignment.	Contractor	CSC
15. Loss of Agricultural Production	• Earth filling may alter the soil development and soil structure, damage soil	• Demonstrate measures for changing cropping pattern to compensate the loss of crop production including development of demonstrating plots;	Throughout the alignment	Contractor	CSC

Environmental Issues	Environmental Impacts	Mitigation Measures	Location	Who will Implement	Who will Supervise
	texture and limit to agricultural production; • Most of the burrow pits will be filled; winter cropping will face some difficulties as water retention area will be shrunk; • Increased movement of construction laborers will have adverse impacts on adjacent crop fields; • Photosynthesis of nearby crops in the corridor may become slower due to regular deposition of dust and smoke on leaves surfaces created in by vehicles movement.	• Provide training program for the farmers and technical support to them. They should get employment opportunity on a priority; • Fertile land where two or more crops grow at present or the land which has such potentiality, that land could be avoided; • Top soils of adjacent land could be preserved as these are most fertile and suitable for crop production; • Agricultural production could be compensated by increasing cropping intensity through introduce of short durational crops, hybrid seeds, HYVs, improved technologies etc.; • All fallow land could be cultivated properly; • The farmers could be made financially better off by crop diversifying; • Precaution should be maintained to keep soil erosion and flight of dust at a minimum level, wetting of soil may be helpful; • Ensure maximum possible cleanliness of construction activity;			
16. Pollution from Wastes	• Dismantling of any structure will generate solid waste; and • Kitchen and sewage waste from labour camp will cause growth of flies and water born germs.	• Develop waste management plan for various specific waste prior to commencing of construction and submit to CSC for approval; • Prepare spill control procedures and submit the plan for CSC approval; • Train the relevant construction personnel in handling of fuels and spill control procedures; • Store dangerous goods in bounded areas on a top of a sealed plastic sheet away from watercourses; • Refueling shall occur only within bounded areas;	All construction camp and contractor operations areas, such as batch plants and maintenance yards.	Contractor	CSC

Environmental Issues	Environmental Impacts	Mitigation Measures	Location	Who will Implement	Who will Supervise
		• Make available MSDS for chemicals and dangerous goods on-site; • Place a high emphasis on good housekeeping practices; • Put containers and drums in temporary storages in clearly marked areas, where they will not be run over by vehicles or heavy machinery. The area shall preferably slope or drain to a safe collection area in the event of a spill; • Take all precautionary measures when handling and storing fuels and lubricants, avoiding environmental pollution.			
17. Asphalt Hot Mix Plant, Rock Crushing, and Bitumen Supply	• Rock crushing activities will generate noise and dust, and asphalt hot-mix plant and pavement works will generate gas and odor while compaction of the pavement will also generate noise and dust; • Soil may be contaminated by oils and chemicals at asphalt/bitumen plant sites, workshop areas, and equipment washing yards; • The contamination may limit the future use of the land for agricultural purposes.	• Cement batching and aggregate mixing plant will be located as far as possible (at least 500 m from settlements and habitation near the project corridor, or as required by environmental regulations; • All conditions of DoE permits and local guidelines will be observed; • Dust suppression equipment will be installed at cement and aggregate mix plants; • Areas of construction, as well as the haul road, will be kept damp by watering; • All hot-mix plants, crushers, and batching plants will be located in agreement with the local district or municipality, and installed in a sealed area only after receiving approval from the relevant local authority and DoE.	All Asphalt hot mix plant, rock crushing plants	Contractor	CSC
18. Construction Waste Disposal (Waste water,	• Oil, grease etc. from construction machinery;	• Organize disposal of all wastes generated during construction in an environmentally acceptable manner;	All construction camp and	Contractor	CSC

Environmental Issues	Environmental Impacts	Mitigation Measures	Location	Who will Implement	Who will Supervise
Oil, Hazardous Waste etc.	• Hazardous and solid waste from construction material and food; • Sanitary waste from staff toilets; • Waste water from washing and sprinkling.	• Vehicles transporting solid waste shall be covered with tarps or nets to prevent spilling waste along the route; • Train and instruct all personnel in waste disposal practices and procedures as a component of the environmental induction process; • Provide absorbent and containment material (e.g., absorbent matting) where hazardous materials are used and stored and personnel trained in the correct use; • Provide PPE to construction personnel, appropriate to materials in use; • Make sure all containers, drums, and tanks that are used for storage are in good condition and are labelled with expiry date; • Minimize the production of waste materials by 3R (Reduce, Recycle and Reuse) approach; • Prohibit burning of solid waste; • Provide reuse containers at each worksite; • Avoid the use of material with greater potential for contamination by substituting them with more environmentally friendly materials; • Maintain all construction sites in a cleaner, tidy and safe condition.	contractor operations areas.		
19. Construction Yards	• The siting of construction camps may cause loss of plantation and vegetation; • The construction process will take several years, with the result that the camps will take on a semi-permanent appearance;	• The construction camps shall not be located within or nearby the sensitive cultural structures; • The crushing plants, asphalt hot mix and batching plants will not be located in environmentally sensitive cultural sites, productive land or existing settlements; • Water and good sanitation facilities should be provided for the camps. Solid waste and sewage shall be managed according to the national regulations;	All construction camp and contractor operations areas.	Contractor	EU and CSC

Environmental Issues	Environmental Impacts	Mitigation Measures	Location	Who will Implement	Who will Supervise
	• Impacts on the local communities and social structures; • Pollution risk of soil and surface water due to sanitation of the construction camp.	• The sites for construction camps and associated facilities shall be reinstated by the contractors just after completion of construction works; • Debris, construction wastes, vegetation or other materials shall not be burned on the site.			
20. Labour Impact	• Child labour may be hired in the construction site	• The contractor will ensure no child under age of 18 is hired.	Construction site	Contractor	CSC
21. Occupational Health and Safety (OHS)	• Construction workers are more likely to be affected by occupational health hazard; and • Construction workers are also likely to be affected by water borne diseases and food poisoning at construction camp.	• An OHS plan should be prepared and followed during construction work; • Workers have to be provided PPE (high visible vest, hard hat, safety harness, gum boot, life jacket, goggles, ear plugs etc.) and it has to be ensured that they use PPE properly; • First Aid Box should be readily available at construction site and labour camp; and • Separate accommodation and toilet for female workers.	All construction camps	Contractor	CSC
22. Community Health and Safety	• Improper health and safety policy maintained at the site may lead to outbreak of different diseases to the surrounding communities / public through the sickness.	• Proper health and safety plan should be prepared by the Contractors prior to start construction and take action accordingly during construction to avoid road accidents and health hazards of the surrounding project community.	All construction areas.	Contractor/ CSC	CSC/ Local Authority
23. Traffic Congestion	• Traffic jams causing inconvenience to the people; • The construction vehicles will add more traffic and	• Prepare and submit a traffic management plan to the CSC for his approval at least 30 days before commencing work on any project component involved in traffic diversion and management;	All construction areas	Contractor	CSC

Environmental Issues	Environmental Impacts	Mitigation Measures	Location	Who will Implement	Who will Supervise
	as a result, traffic congestions and road accidents will be increased.	• Include in the traffic management plan to ensure uninterrupted traffic movement during construction; • Traffic management shall be undertaken in coordination with the local traffic police department; • BRTA traffic rules and regulations should be strictly followed. Divert traffic to follow alternative routes to avoid traffic jams.			
24. Road Accidents	• The influx of heavy vehicles used for construction work on the road may cause sudden road incident and/or accident.	• In Traffic Management Plan, the road safety measures such as speed breakers, warning signs/lights, road safety signs, zebra crossing, flagman etc. should be included; • Provide signs at strategic locations of the roads; • Restrict truck deliveries, where practicable, to day time working hours; • Restrict the transport of oversize loads; • Operate road traffics/transport vehicles, if possible, to non-peak periods to minimize traffic disruptions; • Enforce on-site speed limit; • Install and maintain a display board at each important road intersection on the roads to be used during construction.	All construction areas	Contractor	CSC
25. Income/Job Opportunities	• Some job opportunities for executing the construction activities; and • Income opportunity through generating small business.	• Priority should be given to the local poor and affected people during recruitment; and • Gender equity and equal wage have to be ensured.	All construction areas	RHD/ Contractor	EU and CSC
26. Tree Plantation	• A total of 333 trees will be cut off from the Shal forest and also the road side tress.	• Undertake a Tree Plantation Program such that for one tree two seedlings are planted and all dead trees to be replanted; • 3 trees will be planted against cut down of one tree;	All along the alignment, and according to a	RHD/ Contractor	EU, CSC

Environmental Issues	Environmental Impacts	Mitigation Measures	Location	Who will Implement	Who will Supervise
		• Especial care should be taken for biodiversity rich areas during construction.	tree replanting plan.		
Operation Stage					
1. Air Quality	• Dust (PM) generated from the road surface dispersed to the air by vehicles running on the roads, and • Toxic gases (NOx, SOx, CO, VOC, etc.) generated from vehicle's engines when burning fuel.	• The road and bridge surface should be maintained periodically to limit dust generated from the aged asphalt layer. • Black smoke producing old engine driven vehicles' movement shall be prohibited.	Along the entire corridor	Contractor/ RHD	RHD
2. Noise and Vibration	• Noise pollution due to the movement of increased number of vehicles; and • Wildlife particularly the birds will be affected mostly because of noise.	• Use of hydraulic horn has to be prohibited and use of horn in front of sensitive areas shall be controlled; • Trees shall be planted along the road section near the populated areas, and in the space between the ROW and the slope. In order to effectively mitigate the impact of noise, trees shall be planted in strip with its length covering the populated area plus 100m more at both sides of the populated area.	To be determined during detailed design period for baseline establishment and as well as during construction period.	Contractor/ RHD	RHD
3. Water Pollution (Surface and Ground Water)	• Erosion on the slope of the road will add silts into the nearby surface water streams; • Uncontrolled release of contaminated storm-water/road runoff from road surfaces will pollute the surface water;	• Slopes protection measures and periodic maintenance of the road's slopes have to be ensured; • Construction of sanitary public toilet and Arsenic free drinking water structures (e.g., deep tube well); • Cross slopes and longitudinal drainage will be constructed to ensure faster removal of storm-water/road runoff; • Sedimentation ponds and oil separators will be provided to avoid contamination by run-off and oil spills, especially drainage will be provided for oil	To be determined during detailed design period for baseline establishment and as well as during	Contractor/ RHD	RHD

Environmental Issues	Environmental Impacts	Mitigation Measures	Location	Who will Implement	Who will Supervise
	• Accidental spillage of hydrocarbon products from the vehicles moving on the road; • Because of the project many commercial and business structures will be constructed alongside the road which will cause increased groundwater extraction.	spills near water channels to prevent any contamination; • Drainage and collection structures on the road project, particularly in areas near the river and irrigation canals, shall be designed such that spills of hazardous materials shall not result to contamination of these water courses.	construction period.		
4. Split of Community	• The road may divide community in that area.	• Efforts have to paid to avoid split of community.	Along the entire corridor	RHD	RHD
5. Road Accidents/ Road safety	• The increased vehicular movement and speed may result in road safety issues like traffic accidents. The accidents may also be due to tiredness; • The vehicles may not follow speed limit having widened and free road which may cause road accidents; • Accidents due to non-ideal location of road crossings, sidewalks.	• By enforcing speed limits and imposing penalties on the traffic violators will ensure the road safety; • Traffic signs will be provided to facilitate road users about speed limits, rest areas, eating establishments etc. Warning messages will also be displayed at appropriate locations to aware drivers about likely accidents due to over speeding; • All the lanes, median, sharp bends will be reflectorized to facilitate travelers in the night time; • Proper lighting arrangement on the proposed highway will be done at required places; • The BRTA rules should be followed strictly in every relevant case; • Study the recommendations from the public regarding placement of road crossings and sidewalks to optimize road safety.	Along the entire corridor	RHD	RHD
6. Income/ Job Opportunities	• Development of new infrastructure of	• Illegal infrastructure development and encroachment alongside the road have to be checked and controlled.	Along the entire corridor	RHD	RHD

Environmental Issues	Environmental Impacts	Mitigation Measures	Location	Who will Implement	Who will Supervise
	residential, commercial, social and community is expected to be established alongside the upgraded highway.				

8.4 Environmental and Social Monitoring Plan

The monitoring plan is one of the important tools of the implementing the mitigation plan for the proposed road project. The Monitoring plan provides guidance regarding environmental issues/parameters, location, frequency and means of monitoring.

The aim of environmental monitoring during the pre-construction, construction and operation phases of the project road is to compare the monitored data against the baseline condition collected during the study period (particularly during the detailed design stage) to assess the effectiveness of the mitigation measures and the protection of environmental components (e.g., air, water, soil, noise etc.) based on the national environmental standards (e.g., ECR 1997). Since the project is likely to have impact on various components of the environment, a comprehensive monitoring plan covering soil erosion, drainage congestion, tree plantation, air quality, water quality, noise, wildlife movement, workers' and community health and safety and so on need to be developed.

An Environmental Monitoring Plan (EMoP) has been prepared **(Table 8-2)** along with this EIA for the execution as a means to mitigate or minimize the adverse impacts associated with construction and operational activities of the project on the natural and social environments.

8.4.1 Objectives

The objective of environmental monitoring during the construction and operation phases is to compare the monitored data against the baseline condition collected during the study period to assess the effectiveness of the mitigation measures and the protection of the ambient environment based on national standards. The main objectives of the pre- construction, construction and operation phase monitoring plans will be to:

- Monitor the actual impact of the works on physical, biological and socioeconomic receptors within the project corridor for indicating the adequacy of the EIA;
- Recommend mitigation measures for any unexpected impact or where the impact level exceeds that anticipated in the EIA;
- Ensure compliance with legal and community obligations including safety on construction sites;
- Monitor the rehabilitation of borrow areas and the restoration of construction campsites as described in the EMP;
- Ensure the safe disposal of excess construction materials;
- Appraise the adequacy of the EIA with respect to the project's predicted long-term impacts on the corridor's physical, biological and socio-economic environment;
- Evaluate the effectiveness of the mitigation measures proposed in the ESMP and recommend improvements, if and when necessary;
- Compile periodic accident data to support analyses that will help minimize future risks; and

- Monitor the survival rate of avenue plantations.

Table 8-2: Environmental and Social Management Plan- Monitoring Actions

Environmental Issues	Monitoring Method			Responsible Organization	
	Method of Collecting and Reporting Data	Location	Duration and Frequency	Implement	Supervise
Pre-Construction Stage					
1. Landscape/Topography	Consultation with adjacent households along the road.	Throughout the alignment, bridges and culverts, embankment height.	Throughout the pre-construction period.	Design consultants (DC)	PIU
2. Climate	Consider climate condition and natural calamities occurred in the last century.	Bridges and culverts, embankment height.	Throughout the pre-construction period.	Design consultants (DC)	PIU
3. Land Acquisition and resettlement	Ensure that PAPs get compensation as per RP; and Resettlement of PAPs as per the procedure of RP.	Along the project's alignment	As per RP	PIU/Deputy Commissioner (DC)	PIU and Construction Supervision Consultants (CSC)
4. Hill Cutting	Verification of approved excavation boundaries, marked locations and limits of work against the approved drawings and permissions.	Along the hill cutting alignment	Once, before commencement of excavation; recheck following any change in approved work limits.	PIU/DC	PIU and CSC
5. Agriculture Production Loss	Ensure that PAPs get compensation as per RP; and resettlement of PAPs as per the procedure of RP.	Along the project's alignment	As per RP	PIU/DC	PIU and CSC
6. Removal of Commercial Structures	Safe removal/or relocation; and Handling and transport of debris.	Along the project's alignment	As per RP	PIU/DC	PIU and CSC
7. Removal of Physical Cultural and Other Community Structures	The physical cultural and community structures to be relocated in stages, after consultation with local communities.	Along the project's alignment	As per RP	PIU/DC	PIU and CSC

Environmental Issues	Monitoring Method			Responsible Organization	
	Method of Collecting and Reporting Data	Location	Duration and Frequency	Implement	Supervise
	Local communities will be compensated for dismantling and relocating these sites.				
8. Damage to Public Utilities	Ensure that the respective authority of utility service providers and consumers are informed in time; and inspect that utilities are being relocated at the designated site maintaining proper safety measures.	Along the project's alignment	As per RP and/or utility relocation plan prepared by RHD	PIU /DC/ Contractor	PIU and CSC
9. Tree Cutting and Wildlife	Notice of removal of trees will be provided. RHD or local NGOs will ensure compensation and planting of at least three trees for every one cut. A basic tree replacement plan has been prepared and is included as Appendix. For every tree cut, three will be replanted. Checking whether proper compensation as mentioned in RP is received by PAPs; Checking whether wildlife is not harmed and/or get enough time to migrate safely before tree felling.	Within ROW along the alignment.	During tree felling and site clearing operations.	FD/ PIU /DC	PIU, MoEF, and CSC
10. Change of Local Hydrology/Drainage Congestion	Inspect waste and field management at camps and record actions taken when non-compliance recorded.	Along the project's alignment	Construction and operation stage/ Monthly inspection/ Long term.	PIU / Design Consultant (DC)	PIU, BIWTA, and CSC
11. Water Bodies and Fisheries	Confirming the population and change in types of fish species.	Along the project's alignment.	Throughout the pre-construction period.	PIU /DC/NGO	PIU, DOF and CSC

Environmental Issues	Monitoring Method			Responsible Organization	
	Method of Collecting and Reporting Data	Location	Duration and Frequency	Implement	Supervise
Construction Stage					
1. Landscape/Topography	Consultation with adjacent households and RHD authority to get opinion on work being completed.	Along the project's alignment	Construction stage/Monthly inspection	Contractor	PIU and CSC
2. Hill Cutting	Monitor excavation activities, quantities, and compliance with approved boundaries, designs, and method statements, including unauthorized tree felling, vegetation clearance, and wildlife disturbance within forest areas.	Hill cutting along the proposed road alignment.	Daily throughout the implementation of hill-cutting activities.	Contractor	PIU and CSC
3. Loss of Top Soil	Top soil management	Along the project's alignment	Construction stage/Monthly inspection	Contractor	CSC
4. Dredging and Dredged Materials	Cd, Cu, Zn, Hg, Pb, As, PCB, POPs, Hydrocarbons.	Proposed dredging sites	Once	Contractor	CSC
5. Soil Erosion and Siltation	Slope protection measures; and strengthen slope stability of the embankment with special consideration at bridge and culvert construction sites.	Along the project's alignment	Regular/and or during construction period	Contractor	CSC
6. Soil Contamination	• Careful and proper handling of oil and other hazardous liquids by trained personnel; and handling/disposal of oil and liquid wastes at designated site; and • Total Organic Matter, Total Phosphate, Nitrate, Ammonia, Total	Along the whole alignment; Construction yards, bridge and dumping sites	Regular/and or during construction period	Contractor	CSC

Environmental Issues	Monitoring Method			Responsible Organization	
	Method of Collecting and Reporting Data	Location	Duration and Frequency	Implement	Supervise
	Sulphate, Al, As, Cd, Ca, Co, Total Cr				
7. Air Pollution and Dust	PM2.5, PM10, CO, SO2, NOx, O3, temperature, humidity, wind speed and wind direction.	Residential/Populated/Cultural areas near to construction site along the alignment.	Quarterly	Contractor	CSC
8. Noise and Vibration	Measurement of noise level in dBA and vibration in velocity, acceleration, displacement.	Bridge site, sensitive spots (school, college, mosque, hospital) and construction yard.	Quarterly	Contractor	CSC and DOE
9. Surface Water Quality	pH, temperature, EC, DO, Turbidity, TOC, Total P, TSS; BOD5, COD, Cd, Cu, Fe, Pb, Oil and Grease.	At water bodies & other small bridges;	Quarterly	Contractor	CSC and DOE
10. Groundwater Quality	pH, TDS, Cl, As, Mn, Fe, SO4, TC, FC	Sites where the pile drilling to 30 m depth is conducted and/or where any new wells are dug or a well becomes a camp potable water supply, testing to be undertaken.	Quarterly	Contractor	CSC and DoE
11. Drainage Congestion	Construct drainage structures as per the design; and Control erosion and siltation.	At cross drainage sites.	Regular/and or during construction period	Contractor	CSC
12. Vegetation	Ensure clearance of vegetation in accordance with the plans and check the re-vegetation done at the earliest.	Along the project's alignment	Regular/and or during construction period	Contractor	CSC
13. Terrestrial Fauna	As part of the monthly site inspection, examine embankments, subgrade storage	Along the project's alignment	Twice a year in dry and rainy seasons	Contractor	CSC

Environmental Issues	Monitoring Method			Responsible Organization	
	Method of Collecting and Reporting Data	Location	Duration and Frequency	Implement	Supervise
	areas, to confirm these facilities are not contributing to environmental degradation.				
14. Aquatic Species	Evaluation of existence of species; Benthos & Plankton	Major bridge locations and other water bodies.	Quarterly	Contractor	CSC
15. Fisheries	Confirming the population and change in types of fish species.	Along the project's alignment	Twice a year in dry and rainy seasons.	Contractor	CSC
16. Loss of Agricultural Production	Measurement for changing cropping pattern to compensate the loss of crop production.	Along the project's alignment	Twice a year in dry and rainy seasons.	Contractor	CSC
17. Pollution from Wastes	Waste and effluents to be collected and disposed safely to the designated sites.	Construction yard, bridge and dumping sites.	Weekly	Contractor	CSC
18. Asphalt Hot Mix Plant, Rock Crushing, and Bitumen Supply	Wastes and garbage from bridge construction sites to be disposed properly at the designated sites.	Construction yard, bridge and dumping sites.	Weekly	Contractor	CSC
19. Construction Waste Disposal (Waste water, Oil, Hazardous Waste etc.)	Checking storage, transportation, handling, and disposal of hazardous waste.	Construction yard, bridge and dumping sites.	Weekly	Contractor	CSC
20. Construction Yards	Undertake good housekeeping practices inspection weekly and report results and record what actions taken to mitigate.	Construction yard	Weekly	Contractor	EU and CSC
21. Labour Impact	Ensure no child labour is hired	Along the project's alignment	Regular/and or during construction period	Contractor	CSC
22. Occupational Health and Safety (OHS)	• Check quality of food, safe water supply, hygienic toilet, first aid box, separate toilet for female workers,	Construction site and labour camp.	Regularly	Contractor	CSC

Environmental Issues	Monitoring Method			Responsible Organization	
	Method of Collecting and Reporting Data	Location	Duration and Frequency	Implement	Supervise
	accommodation at construction camp.				
23. Community Health and Safety	• Control movement of project traffics especially at densely populated areas such as school, bazars etc. to avoid any accident.	School, college, mosque, bazar etc.	Regularly	Contractor/ CSC	CSC/ Local Authority
24. Traffic Congestion	Traffic volume, composition and speed.	Along the project's alignment	Continuous records	Contractor	CSC
25. Road Accidents	• Evaluation of effect of traffic schedules; • Fitness of vehicles should be strictly maintained.	Project Company's office	Continuous records	Contractor	CSC
26. Income/Job Opportunities	• local poor and affected people; • No discrimination based on gender, caste, origin, religion, and wage have to be ensured.	Construction site and labour camp	During construction period	Contractor	CSC
27. Tree Plantation	• Ensure tree plantation program along the alignment.	Along the alignment	During construction period	Contractor	CSC
Operation Stage					
1. Air Quality	Check the level of PM2.5, PM10, CO, SO2, NOx, O3, temperature, humidity.	Most busy traffic points	Twice per year for operating Years 1, 3 and 5.	Contractor/ RHD	RHD
2. Noise and vibration	Measurement of noise dB(A) and vibration in velocity, acceleration, displacement.	Bus Stoppages/cultural sites along the alignment.	Twice per year for operating Years 1, 3 and 5.	Contractor/ RHD	RHD
3. Water pollution (surface and groundwater)	SW: pH, DO, Turbidity, TOC, Total P, TSS; TSS, BOD5, COD, Cd, Total Cr, Cu, Fe, Pb, Oil and Grease;	At major surface water bodies;	Twice per year for operating Years 1, 3 and 5.	Contractor/ RHD	RHD

Environmental Issues	Monitoring Method			Responsible Organization	
	Method of Collecting and Reporting Data	Location	Duration and Frequency	Implement	Supervise
	GW: pH, TDS, Cl, As, Mn, Fe, SO4, TC, FC				
4. Split Community	Ensure community connections remains same	Along the alignment	Regular	RHD	RHD
5. Road Accidents/ Road safety	Traffic signs, kilometre posts, speed breakers (where required) along the road and traffic signal at road crossing have to be provided.	At designated places (intersection points, cultural structures, School, hospital).	Regular	RHD	RHD
6. Income/ Job Opportunities	Control illegal infrastructure development and encroachment alongside.	At market areas	Regular	RHD	RHD

8.5 Institutional Arrangements

Roads and Highways Department (RHD) under the Ministry of Road Transport and Bridges (MoRTB) is representing the Government of Bangladesh as the Executing Agency (EA) of the proposed project RHD program. RHD is responsible for undertaking all studies, design, and construction of this Project. It will also be responsible for operation and maintenance (O&M) of the project after its completion. RHD is mandated to undertake steps, as per guidelines of the MoRTB and advice of the Government, to secure required funds both from external and internal sources for the implementation of the Project.

For efficient and smooth implementation of the project, suitable institutional arrangements are necessary to manage and implement the RP. Proposed project- RHD Institutional arrangement consist of PSC, PIU, RSEC and PIC. Institutional arrangements required for implementation of Resettlement Plan includes capacity augmentation of RHD head office, RHD field offices, Deputy Commissioners offices, appointment of INGO/consulting firm, formation of various committees like: GRC, PAVC, RAC, etc. The Deputy Project Director at Head Office will function as the Chief Resettlement Officer (CRO). The CRO will have overall responsibility relating to resettlement and rehabilitation policy guidance, coordination, planning, monitoring and reporting. The Deputy Project Director at Head Office will function as the Chief Resettlement Officer (CRO). The CRO will have overall responsibility relating to resettlement and rehabilitation policy guidance, coordination, planning, monitoring and reporting.

8.6 Implementation Arrangements

Environmental management of the project requires a multidisciplinary approach with consolidated and coordinated efforts from a number of agencies. Various institutions will be involved during implementation of the Project. While contractor is responsible for implementation of ESMP during construction works, Construction Supervision Consultant (CSC) is primarily responsible for supervision of monitoring of the implementation of the ESMP and also reporting the progress to RHD. Ministry of Road Transport and Bridges (MoRTB) is the Executing Agency (EA). The RHD will be involved in the implementation and management of the works for which they are responsible by establishing a Project Implementation Unit (PIU).

8.7 Institutional Responsibilities

A number of institutions will be involved during construction and operation phase of the Project in order to achieve environmental compliance goal set by ESMP. A proposed institutional framework for ESMP implementation has been showed in Figure. These institutions will carry out following distinct but interrelated responsibilities:

8.7.1 Ministry of Road and Transport and Bridges (MoRTB)

MoRTB as the Executing Agency of the Project will have the overall responsibility of ensuring that the environmental safeguard requirements of the project are fulfilled through the Road and Highways Department. The main responsibilities of the MoRTB are to:

- Ensure that the project, regardless of financing source, complies with the provisions of the ESMP;
- Ensure that project implementation complies with government environmental policies and regulations;
- Ensure that project environmental management is implemented and reported to the Steering Committee and the financing agency as required.

8.7.2 Inter-ministerial Steering Committee

A Steering Committee with representatives from related Ministries and Government agencies covering will be established at the time of implementation of this project. This committee will facilitate the coordination of various agencies under the ministries in the environmental management and monitoring process.

8.7.3 Roads and Highways Department

The Roads and Highways Department (RHD), as the main project implementing agency, is responsible for the effective execution of the environmental safeguards. Although not directly involved in the day-to-day monitoring activities, RHD will have oversight on the monitoring activities carried out by the CSC and contractor through PIU and will report to MoRTB.

8.7.4 The Social and Environmental Circle

There is a dedicated Social and Environmental Circle (RSEC) as a technical wing who is responsible for ES management of all RHD development projects. This RSEC has two divisions namely Environment and Resettlement. The Resettlement division consist of 4 members comprise of one Executive engineer, one sub-divisional engineer and two assistant engineers. As RSEC will be the part of PIU, the RSEC will be responsible for overseeing the RAP implementation, supervision and monitoring with coordination of PIU Social Specialist/s.

8.7.5 Project Implementation Unit

The Project Implementation Unit will be established under the RHD will include an environmental unit (EU). The EU will consist of one Executive engineer, one sub-divisional engineer and two assistant engineers to monitor environmental compliance. The EU will be

responsible for overseeing of the monitoring activities conducted by the CSC on its behalf. It will also be responsible for overseeing the activities of contractor through PIU.

8.7.6 Construction Supervision Consultant

The CSC functioning under the RHD will be directly responsible for contract administration and day-to-day project supervision including environmental management. The CSC will consist of an environmental unit with 1 international and 1 national environmental expert. The CSC will advise the RHD and the PIUs on ESMP implementation, and monitor the work of the contractors in the field. Overall, CSC is responsible for ensuring proper and timely implementation of all their tasks specified in the ESMP.

8.7.7 Contractor

The contractor will be primarily responsible for preparing an implementing the CESMP. Each contractor will be recommended to have one Environmental Specialist and one Occupational, Health and Safety (OHS) Specialist, who will be working in close coordination with the environmental staff of CSC and PIU.

8.8 Environmental Monitoring Cost Estimation

The following items have been incorporated as Environmental Safeguard Cost in the document:

Table 8-3: Environmental Safeguard Cost

Item	Description of Item	Unit	Quantity	unit rate	Amount (Tk.)
	Environmental and Social Mitigation and Enhancement Works				
1	Awareness documents (signs/ posters) for effective use of water source and proper waste management, Lum sum basis)	LS	1	150,000.00	150,000.00
	Environmental awareness training will be arranged by the PMU one at construction period and one at operation phase	LS	1	150,000.00	150,000.00
	Training on environmental health and safety will be arranged by PMU at implementation phase	LS	1	150,000.00	150,000.00
2	a) Temporary Camp for the labourers with the facilities of cooking, utensils, washing, disposal of solid waste and providing waste bins etc. are to be with entire satisfaction of Engineer-in-charge (EC). Labour camp will be separate for both Male & Female workers. Labour camps will be constructed at different locations. At every location separate facilities for both male & female workers will be provided.	Nos	2	350,000.00	700,000.00
	b) Adequate supply of potable water for ensuring; Minimum one at every labour camp location	Nos	2	100,000.00	200,000.00
	c) Sanitation: 1 nos. of Toilets; at four separate corners as directed by EC.at every camp location	Nos	2	200,000.00	400,000.00

	d) Providing First Aid Box with sufficient gauge, bandage, antiseptic cream, antiseptic lotion and with sufficient medicine with the satisfaction of EC.	Nos	2	10,000.00	20,000.00
3	Prevention of spillage, leakages of polluting materials, i.e. arrangement of keeping fuel, lubricant, kerosene, mobil etc. for which a pucca platform (at least 100 sq. ft with brick soling and plastering), as per satisfaction of EC.	Nos	4	20,000.00	80,000.00
4	Rehabilitation of whole areas including stockpile, brick crushing sites, borrow areas, workforce camp to the entire satisfaction of the EC	LS	1	500,000.00	500,000.00
5	Construction of temporary earthen drain and its maintenance during rains to drain out the surface water during rains and construction	LS	1	200,000.00	200,000.00
6	Providing personal protection equipment (PPE); 1 pair-hand gloves, 1 pair-gumboot, 1 pair safety boot, 1-approne, 1-eye protecting glas, 1-Helmet etc.	Nos	150	8550	1,282,500.00
7	Protection of wetland/pond/river	LS	1	200,000.00	200,000.00
8	Preeotection of tertestial & aquatic flora & fauna	LS	1	200,000.00	200,000.00
9	Construction Traffic Management	LS	1	300,000.00	300,000.00
Sub Total					**4,532,500.00**
Pre-Construction phase					
1	Air quality monitoring (PM10, PM2.5, CO,NO,NO2, SO2, O3, VOC) before starting the construction work.	Nos	3	10,000.00	30,000.00
2	Surface Water quality test before starting the construction work. During construction phase this data will be used as baseline data	Nos	2	26,000.00	52,000.00
3	Ground Water quality test before starting the construction work. During construction phase this data will be used as baseline data	Nos	2	23,000.00	46,000.00
5	Noise and vibration test before starting the construction work. During construction phase this data will be used as baseline data	LS	1	10,000.00	10,000.00
6	Site specific EMP preperation by contractor	Nos	1	200,000.00	200,000.00
Sub-total					**338,000.00**
Construction phase					
1	Air quality (Air quality will be tested at selected 2 locations. before starting construction contractor will test air quality and that data will be compared with the results which will be tasted every six months. Approximate construction period is 3 years so air quality will be tested 6 times (3 locations) during construction)	Nos	18	10,000.00	180,000.00
2	Surface Water half yearly (at 2 locations total 6 times during construction).	Nos	12	26,000.00	312,000.00

3	Ground Water half yearly (at 1 locations total 6 times during construction).	Nos	6	23,000.00	138,000.00
4	Waste management L.S	LS	1	200,000.00	200,000.00
5	Noise and vibration test (at 12 locations total 6 times during construction).	LS	6	10,000.00	60,000.00
7	Dust Measurement	LS	1	200,000.00	200,000.00
9	Drainage facilities at construction site	LS	1	200,000.00	200,000.00
10	Accidents & Occupational safety	LS	1	100,000.00	100,000.00
11	Workforce training	LS	1	200,000.00	200,000.00
13	Provision of sufficient lighting facillitises during construction work	LS	1	100,000.00	100,000.00
Sub-total					**1,690,000.00**
Operation Stage					
1	Air quality (at 3 locations total 1 times after construction)	Nos	3	10,000.00	30,000.00
2	Surface Water quality (at 2 locations total 1 times after construction)	Nos	2	26,000.00	52,000.00
3	Ground Water quality (at 2 locations total 1 times after construction)	Nos	2	23,000.00	46,000.00
4	Noise and Vibration Test (1 times at 12 locations)	Nos	1	10,000.00	10,000.00
5	Tree plantation for ecological enhancement work- preferably local fruits, flowers, medicinal and ornamental trees- (including protection and conservation during project defect liability period) 1 nos. of the tree (for Environmental enhancement)	Nos	21151	1,000.00	21,151,000.00
Sub-total					**21,289,000.00**
Grand total					**27,849,500.00**

8.9 Project Benefits

Through the widening of the existing road project, the existing road network will be improved. The benefits of the proposed project are:

- The target is to widening, strengthening and raising of existing 36.50 pavement, 9 R.C.C & P.C girder bridge, 23 R.C.C box culvert, 1.50 km rigid pavement, 3850m will be constructed. This will amplify the peaceful use of road. A total of 38km road will be improved from 5.5m to 11.3m.
- Both Government of India and Government of Bangladesh joined hands together for this road widening project. Two-way commerce between the two countries would expand which would benefit both India and Bangladesh and also contribute to establishing road network between the Chattogram port and the Ramgarh land port and open the door for two-way trade between India and Bangladesh through Sabram/Ramgarh land port.
- This road widened road will improve social services by providing quicker and safe mode to transport. The probability of accident will be reduced and also more vehicle can travel

safely. It will reduce travel time as well as traffic congestion. The implementation of the project would establish a safe, developed and time and cost-efficient road transport network between the two countries.

- Widening of road will provide employment opportunity to skilled, semi-skilled and unskilled labour during construction and operation phases of the project. It will provide specific attention to employment potential of local unemployed population. Participating in this project will impart specialized skills to them to be eligible for such employment in different project.
- It will reduce traffic congestion since the road will be widened from two lane to four lane. It will become easy to travel through this road.
- The road plays a vital link between Bangladesh and India. Widening the road will increase tourism opportunity.
- Meet up Annual Average Daily Traffic (AADT).
- Reduction in vehicle operation cost.
- Establish strong, safe & sustainable Road network.
- It will bring an overall development in economy and lifestyle. Different kind of business opportunity will open around the road which will help improve local people's financial problem as well as lifestyle.

CHAPTER 9 GRIEVANCE REDRESS MECHANISM

9.1 Introduction

The project will establish a Grievance Redress Mechanism (GRM) to address complaints and grievances made to the grievance redress committee (GRC) about any irregularities, the GRC will try to resolve the issues/conflicts amicably and quickly to ensure the project implementation proceeds unhindered. The grievance redress committee (GRC) would be established prior to the implementation of land acquisition and resettlement activities, which shall be available for PAPs who are directly or indirectly affected by the project.

The GRM is intended to provide a clear step by step process, enabling a grievance to be examined and prompt resolution established. The overriding principles of the GRM are that it must be non-threatening, easily accessible, quick and impartial, delivering decisions to the complainant in an unbiased and non-partial manner. The GRM has been developed through public consultation so that people of every walk can participate. The GRM shall provide a reachable and reliable platform for receiving and facilitating the satisfactory resolve of grievances made by the Project Affected Persons (PAP's) according to the related interventions proposed under the project.

9.2 Objectives

Project-affected-people and any other stakeholder may submit comments or complaints at any time by using the project's Grievance Redress Mechanism (GRM). The overall objectives of the GRM are to:

- Provide a transparent process for timely identification and resolution of issues affecting the project and people, including issues related to the environmental impact, resettlement and compensation program;
- Strengthen accountability to beneficiaries, including project affected people;
- Compensation payment;
- Failure to fulfill commitments;
- Poor management of construction activities;
- Accidents due to inappropriate planning of vehicle movement;
- Cultural conflicts between migrant workers and local communities;
- Disturbance due to excessive noise or other nuisance during construction or operation to unfair treatment of workers or unsafe working conditions;
- Gender Based Violence and gender issues;
- Complain on labor influx;
- Complain or comment from different public, private and international stakeholders;
- Complain, comments or suggestions from transport workers, labors, contractors, students, teachers, business entrepreneurs etc.

9.3 Details of Mechanism

9.3.1 Formation and Operation of the GRC

Rather than suggesting a route normally taken when a citizen has a concern, namely the local administrative official route, grievance redress committees (GRCs) will be formed in each Union Parishad (UP) the project passes through. Each project will likely trigger both environmental and social impacts and therefore the GRC will need be able to address both areas. Prior to the start of construction RHD will meet with UP heads to request the establishment of such committees, with the understanding that they will have to meet when complaints are received. As a minimum the composition of the GRC will be as follows:

- RHD Regional Director or Representative - GRC Chair and convener;
- Union Parishad Chairman or Senior Representative- GRC Committee member'
- Female member of concerned ward(s) of the UP- GRC Committee member;
- Implementing NGO Representative - GRC Committee member (Social);
- UP DoE representative - GRC Committee member (Environment);
- Female Representative of Affected People (AP) - GRC Committee member (Social);
- Representative from area where grievance was filed- GRC Committee member.

When dealing with environmental matters, the GRC should have five permanent members, with the DoE representative and Female Representative of the AP when social or resettlement matters are on the agenda. In order to convene a GRC meeting a quorum of three persons will be required.

To function in a fair and transparent manner, GRC conditions of operation will form the framework for the decision-making process for the GRCs established for this Project. The following seven GRC operating conditions are:

- GRC meetings must be announced and held locally;
- The complainant must be given the opportunity to appear before the GRC, prior to or during the GRC decision meeting;
- The time between submission of the grievance by a citizen and a decision/ resolution should five days, and any decision/resolution must be placed with the office where grievance was made. If the decision will take longer than five days, the complainant must be notified with an explanation;
- Maximum time for resolution should be one month;
- GRC decisions should be based on majority vote, and should adhere to the objectives defined in the EIA's Environmental Management Plan and related Construction Contract Specifications;
- The GRC will not deal with any matters pending in the court of law; and
- Any resolutions/decisions must, as a first priority, deal with eliminating the source of the environmental effects resulting in the complaint and secondly finding ways to mitigate the effect to the satisfaction of the complainant.

Further, the GRC would only be convened if direct communication between the contractor, the complainant and the CSC cannot solve the issue quickly. Once the complaint reaches the GRC,

the GRC has two weeks to render a decision, based on discussion with all parties involved. The GRC will be used as the third step when filing a complaint.

9.3.2 Steps to a Solution

Step 1: The complainant will be advised to first attempt to settle the complaint through direct communication with the either in person or by a phone, and a call to the local RHD office. If the discussion with the Complainant/Community is successful, the contractor will be responsible for undertaking corrective measures as defined in the grievance decision and recording the decision and filing that with RHD, via the CSC.

Step 2: Should the complaint not be addressed within a week; the next level would be to notify the Upazila office and RHD of the unresolved issue. The Upazila official will then communicate either to the contractor or RHD and a solution will be discussed with the complainant within one working week. If more time is required, The Upazila or RHD should communicate directly with the complainant describing the reasons of the delay.

Step 3: If Step 2 fails to resolve the issue within two weeks of the receipt of the complaint the GRC should be formed and a formal hearing undertaken. At this point a decision must be rendered within 2 weeks or the complainant's concerns will be deemed correct and immediate mitigative actions will be required and fully executed within 5 days of the end of the 2-week period.

Step 4: If Step 3 fails to resolve the issue, the complainant may proceed to legal arbitration.

All GRC decisions will be recorded by the GRC and sent to the local and head office of RHD.

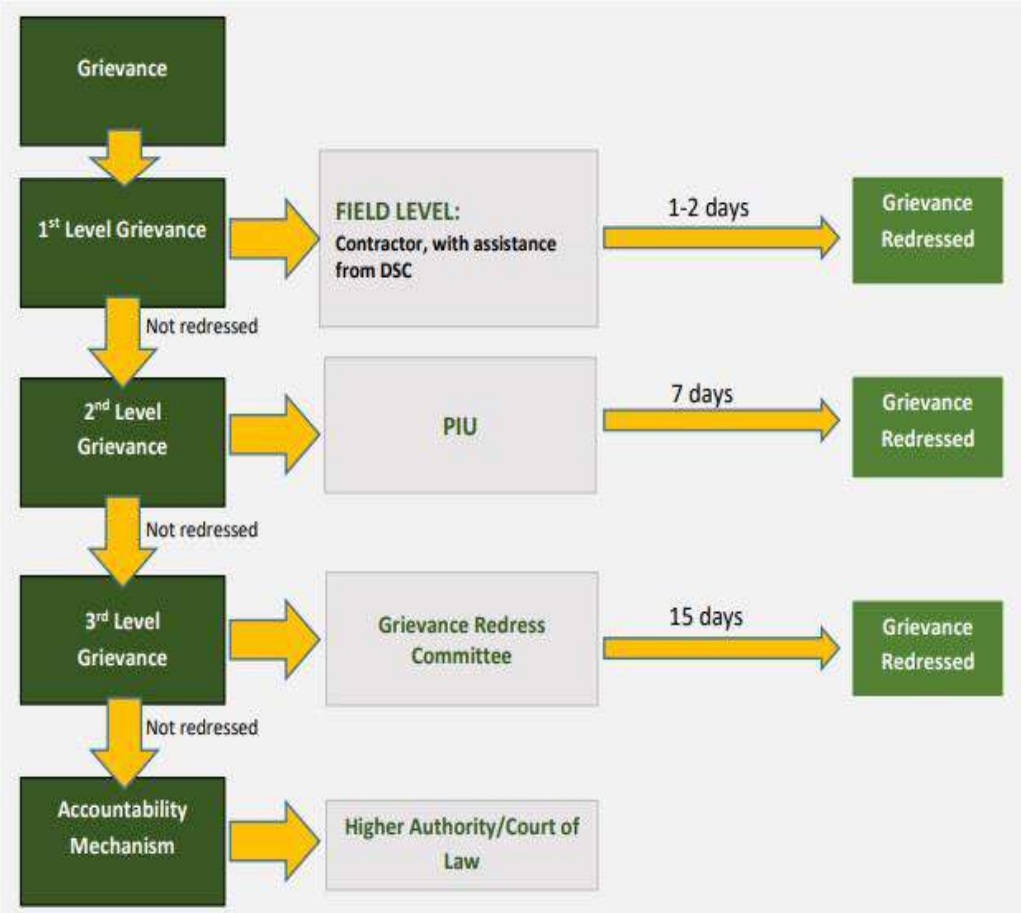

Figure 9-1: Grievance Redress Mechanism of the Project

Any grievance filed with the GRC, must be reported in the Annual report to the CSC who will then submit a consolidated report to RHD.

9.3.3 Construction Workers Grievance

At construction sites, work camps and on-the-job, laborers and other unskilled hired employees of the contractor have little recourse when either their living conditions are badly degraded, they are not paid according to agreement, or basics, such as potable water, are not supplied. Under this contract, as part of the written agreement with each hire, the contract or letter of assignment with the work will include the name and contact information of an RHD and/or the CSC's employee for the worker to contact. The letter/agreement will contain a second statement indicating that the contractor will not penalize the worker for reporting a complaint and if that occurs, the contract will be levied a fine equal to the employees' contract duration from the time of the incident to the end of the contract period. That amount will be paid to the complainant.

The contractor will provide a compliant box, sealed by the CSC and collected by the CSC, thus allowing the construction worker to file complaints by going directly to the CSC.

CHAPTER 10 EMERGENCY RESPONSE PLAN & DISASTER IMPACT ASSESSMENT

10.1 Emergency Response

In the entire emergency response, the initial response to an accident is crucial. Road, bridge, box culvert, like any other construction and installations, must have suitable precautions against accidents or events to meet the emergency spatially during the construction phase. An Emergency Response Plan (ERP) serves the following purposes:

- Prevent fatalities and injuries
- Reduce damage to buildings, stock and equipment
- Protect the environment and the community
- Accelerate the resumption of normal operation
- Provide personnel with established procedures and guidelines.
- Notify the appropriate members of the Company Emergency Response Team personnel as well as regulatory and Govt. agencies.
- Manage public and media relations.
- Notify the next-to-kin of accident victim.
- Encourage cross-departmental communications to ensure a coordinated "Companywide" emergency response.
- Reduce recovery times and costs to lessen the impact of disruptive occurrences on business operations.

Respond to urgent needs in order to protect the subtending environment and community. In general, the primary response is directed by three priorities, which are prioritized in order of significance: people, poverty and environment.

There are six critical steps every organization should follow to create an effective emergency response plan. These are the critical components to any emergency response plan should be examined regularly.

1. **Perform a risk assessment:** To conduct an emergency response plan a comprehensive risk assessment to identify the types of events that may affect the project. Authorities should inform employees of potential emergencies that may occur near where employees live or works or other events that risk interrupting or halting project operations. To operate any project, there should be plan for natural disaster, severe weather, pandemics, facility emergencies, workplace violence, civil disturbance etc.
2. **Document Contact Information:** In any emergency that could harm physically to any labor, the first call should be made to local emergency responders. The project coordinator should have the emergency numbers of all the medical services.
3. **Assign Roles and Responsibilities:** During any emergency, employees will look the leaders for assurance and guidance, so leaders should be in charge of activating emergency response plan.

4. **Take stock of current resources within your organization:** The most important part of emergency response plan is to inspect properly the fire extinguishers, fire alarm systems, first aid kit. These are the instruments that needed at the beginning of any emergency.
5. **Create an evacuation plan:** Evacuation of building or premises is required during an emergency. So, a good evacuation plan for the project will include primary and secondary escape routes.
6. **Communication:** It is essential to consider how to notify the labor of a critical event, how the information will be delivered and received. So, it's important to plan communication process for any emergencies.

In the event of an emergency, emergency response procedures will specify who does what and when. It must be determined who is in control and how will they coordinate emergency responses. Emergency and hazardous situations can fall under one or more of the following areas:

- **Emergency Situation-** It can be fire, explosion and medical emergencies that may occur at that time.
- **Natural Disaster-** there are disasters caused by mother nature such as flooding, earthquakes/cyclones, storms/typhoons/tornadoes and cloudburst lighting are all examples of natural disaster.
- **External Factors-** Food/water poisoning, sabotage, pandemic and war are all examples of external factors.

10.2 Disaster Management

Disaster is an unexpected event due to sudden failure of the system, external threats, internal disturbances, earthquakes, fire and accidents. The first step is to identify the causes which develop/ pose unexpected danger to the structural integrity of construction of project. The potential causes are excessive load, cracks, failure and malfunctioning of sensing instruments, accident, etc. The followings are the steps of the disaster management plan:

10.2.1 Preventive Action

When the possibility of a disaster is suspected, action must be taken to avoid a failure. Engineers in charge of emergency preparedness should identify sources of repair equipment, materials, labor and expertise that can be used in emergency. Engineers should study on hazards and review National Plan for Disaster Management regularly so that they can have an idea what kind of awareness the project site should be taken. Also, the following steps should be taken:

- Communicate with someone outside the project area so that labor can move safely to that place during the event.
- Regular checking of emergency survival kit.
- Always fuel up vehicles and equipment.
- Know how to shut off all utilities.
- Know the warning signs and alert signals for the area.

10.2.2 Reporting Procedures

The level at which a situation will be termed a disaster shall be specified. This shall include the stage at which the surveillance requirements should be increased both in frequency and details.

10.2.3 Communication System

An efficient communication system is absolutely essential for the success of any disaster management plan. This has to be worked out in consultation with local authorities. More often, the entire communication system gets disrupted when a disaster occurs. The damage areas need to be clearly identified and provided with temporary and full proof communication system.

10.2.4 Emergency Action Committee

During the building time. An Emergency Action Committee should be formed to ensure coordinated action. The chairman of this committee might be the PD of RDH. The following people could be on the committee:

At national level-

1. RHD authority representative
2. Safety officer concerned (Appointed by both RHD)
3. Focal Point Operational Coordination Group on Disaster Management
4. NGO Coordination Committee on Disaster Management
5. National Disaster Management Advisory Committee

At field level-

1. District Disaster Management Committee
2. Upazilla Disaster Management Committee
3. Union Disaster Management Committee
4. Police officer of the area
5. Fire brigade representative
6. Health department representative
7. Home guard representative
8. Non-Governmental Organization of the area.

Based on local needs and available facilities, the Emergency Action Committee will establish an evacuation strategy and procedures for implementation-

1. Acknowledge all individuals impacted by the disaster
2. Establish roles and responsibilities for all constituents
3. Make provisions for evacuation
4. Prioritize fire safety planning
5. Cybersecurity and document
6. Account for employee training
7. Incorporate post disaster planning
8. Schedules routine reviews and updates

9. Safe route to be used, adequacy of transport for evacuation, traffic control
10. Functions and responsibilities of various members of evacuation team

10.2.5 Emergency Measures

Accidents, fire problems at labor camps, means of escape from fire camps during fire hazards, ventilation shafts at labor camps, as well as site offices of engineers and others, are all addressed with emergency measures. The purpose of an Emergency Action Plan is to identify locations, populations, and structures that may be impacted as a result of a catastrophic accident (during both construction and operation stage). Preventive action, communication, warning procedures, and coordination among multiple relief authorities should all be included in the action plan. The next sections go over each of these points.

10.2.6 Emergency Lighting

Each camp should have emergency lights that are powered by batteries. For a two-hour period, the battery system should power at least 25% of the lights at the station, platforms, tunnels, and viaducts. If night shift work is required, an emergency generator will be required. Even during operation, adequate lighting will be required at key locations. Emergency lighting helps to illuminate escape route, the location of fire-fighting equipment, security equipment at the site.

10.2.7 Fire Protection

The materials used in the construction of the site office and shad shall meet the relevant fire resistance standards. It is necessary to employ materials with no surface burning qualities. Automatic circuit breakers, both actuated by rising current and activated by overcurrent, must be installed in the electrical systems. Accumulations of garbage made of any flammable material, such as paper or plastic containers, provide a significant fire risk and should not be allowed. Smoking should be forbidden everywhere, including construction sites and camps. In close collaboration with the local firefighting authorities, all aspects of fire prevention and control will be addressed. The following items will be incorporated in the construction of labor camps:

1. Emergency evacuation training requirements
2. Emergency exit requirement
3. Fire-reporting
4. Fire extinguisher
5. Fire prevention plan
6. Rescue and first aid procedures
7. First aid kits

10.2.8 Environmental, Health and Safety (EHS)

Workers may be exposed to a variety of physical dangers as a result of the proposed road construction activity, which could result in mild, debilitating, catastrophic, or fatal injuries. Accidents are unavoidable, but they are more likely to occur if safety protocols and practices are not followed. Second, if workers are not properly protected when handling construction

materials such as bagged cement, major health problems may arise. Cement dust is extremely tiny and caustic to lung tissue, causing lasting damage if inhaled. The risk of workers not wearing protective gear is considerable because much of the cement transfer to the batch plant is still done by manual labor dumping 50kg bags into hoppers. Loud noise exposure might result in temporary or permanent hearing loss. Workers are also at risk of injury from hand-arm vibration, electrical work, welding/works, and working near moving automobiles.

The contractor must have a comprehensive Worker Health and Safety Plan that is backed up by qualified first responders and emergency response facilities. Standard Worker Health and Safety procedures will be included in construction contracts, and contractors will be required to fully apply them. Contractors must take care to protect the health and safety of their employees. The "Work Safety in Common Operation and Construction" will be offered at EIA for the Contactor to implement.

A few mitigation strategies are also listed below:

1. Before any excavation takes place, the contractor is responsible for notifying all applicable companies that excavation work is being performed. During excavation, the contractor is responsible for providing a safe work environment for employees and pedestrians.
2. Specific condition of contract, for maintaining health, safety and environmental conditions, should strictly be followed during construction and installation.
3. Ramps used by equipment must be designed by a person qualified in structural design
4. No person is allowed to cross underneath or stand underneath any loading or digging equipment. Employees are to remain at a safe distance from all equipment while it is operational.
5. Equipment on the job site must be properly maintained and inspected regularly before and after each shift.
6. An employee should be assigned to inspect equipment to ensure proper safety. Equipment should have lights and reflectors if intended for night use.
7. Ensure that construction sites are free of recognized hazards as much as possible.
8. Comply with all standards, rules and regulations.
9. Have in place clear operating procedures which are updated as required and communicated clearly to employees.
10. Traffic movement along Baraiyerhat-Heako-Ramgarh road should be synced with that for using road construction activities, and the contractor is responsible for maintaining traffic flow that will be used to transport materials.
11. Provide safe tools and equipment and maintain them to the best possible standard.
12. Ensure that training is given before any work is done on site, and that training is provided in a language and vocabulary that workers understand.
13. Provide medical exams and training.
14. Have a hazard communication program if employees work with hazardous chemicals.
15. Keep a tidy site.
16. The material should not be stored in such a way that it obstructs the movement of vehicles or people.
17. Follow safety signs and procedures.

18. Emergency phone numbers (hospitals, fire stations, police stations, and so on) will be posted in major construction zones.
19. Personal protective equipment (PPE) should be used during the framing, installation, setting, and fitting of steel frames and sheets for bridges or culverts.
20. Do not start work without instruction.
21. Labor should ask the site in-charge if there is any doubt in mind. Mistakes on constriction sites can cost lives.
22. Emergency on call physician.
23. Community relations will be maintained.
24. Transport facilities on standby to deal with any unforeseen circumstances.
25. During the handling and installation of steel for bridges or culverts, the material safety data sheet (MSDS) will be followed.
26. Employees who have training and education in the above areas will benefit their co-workers and themselves on the construction site.

CHAPTER 11 CONCLUSION AND RECOMMENDATION

11.1 Conclusion

The project will have a number of environmental impacts during the construction and operation periods. Assuming effective implementation of the mitigation measures ad monitoring requirements as outlined in the Environmental Management Plan, the project is not expected to have significant adverse environmental impacts. It should also be pointed out that the environmental benefits are likely to be important; a transport road will internationally link between Bangladesh and India highway by "Shillong-Agartala-Sabrum Road (NH-8)". The potential for congestion will be reduced which will reduce vehicle emissions due to increased and more regular speeds and air quality adjacent to the road should improve. This road will establish a safe, developed, time and cost-efficient road transport network which will help to expand trade between these two countries. It will also help to increase tourism and will provide employment opportunity to the local unemployed people.

The ESMP has identified several mitigative actions needing to be addressed during the pre-construction, construction, and during the operating period of the road. To track the mitigation work, an air, noise, and surface water quality monitoring programme will be started during the construction period. There is little chance that impacts will extend much beyond the 50 m or 100 m wide corridor of impact centered over the road, given that all work will be strictly confined to the road's existing right of way.

The ESMP, its mitigation and monitoring programs, contained herewith shall be included within the contract documents for project works. The contract documents state that the Company shall be responsible for the implementation of the requirements of the ESMP through his own Site-Specific Environmental Management Plan that will adopt all of the conditions of the EMP and add site specific elements that are not currently known, such as the burrow pit locations. This ensures that the Contractor is aware of the environmental requirements of the project and its associated environmental costs.

The ESMP and all its requirements shall then be added to the contract, thereby making implementation of the ESMP a legal requirement according to the contract. He shall then prepare his CESMP which will be approved and monitored by the PIU/Environmental Specialist. Additionally, the prepared CESMP will be submitted to RHD after reviewing by the PIU for RHD's record and future inspection.

RHD has social and environmental circle but they need capacity building and practical exposure. Adequate training shall be imparted as proposed under environmental management plan to enhance the capability of concerned EA officials.

11.2 Recommendations

This project could generate a number of environmental impacts and those are associated with the road and Bridge construction, poor housekeeping by the contractor etc. The EIA's EMP provides the specific guidelines which will help RHD to prevent or mitigate these effects. RHD

will ensure that the work is carried out in an environmentally acceptable manner and the monitoring and reporting is to be completed in a compliant and timely and acceptable to DOE. A strong recommendation is being made to implement the proposed project area. In this project the recommendations are:

- Adequate provisions have been made for the environmental mitigation and monitoring of predicted impacts, along with their associated costs.
- Adverse impacts if noticed during implementation will be mitigated using appropriate design and management measures.
- The EMP, its mitigation and monitoring programs, contained herewith shall be included within the Bidding documents for project works.
- The Bid documents state that the contractor shall be responsible for the implementation of the requirements of the EMP, as per environmental safeguard compliances costs, mentioned in the BOQ.
- The contractor will engage proper persons to implement EMP effectively.
- It is recommended to update environmental guidelines focused on effective implementation of mitigation measures. Performance indicators may also be developed as part of these guidelines to monitor and assess the effectiveness of the mitigation measures.
- To ensure compliance with the CESMP the Contractor should employ a national environmental specialist to monitor and report project activities throughout the project construction phase.

ANNEXURE

Annex-1: Approved ToR

Government of the People's Republic of Bangladesh
Ministry of Environment, Forest and Climate Change
Department of Environment
Environment Clearance Section
www.doe.gov.bd

Record Number: 22.02.0000.000.018.72.0003.26.200 Date: 01/10/2026

Subject: Approval of Terms of Reference (ToR) for the EIA of Widening of Baraiyerhat-Heako-Ramgarh Road Project under Roads and Highways Department

Reference: 544th EC Meeting Minutes

With reference to the subject mentioned above, the Department of Environment hereby givesapproval of the Terms of Reference (ToR) for the Environmental Impact Assessment (EIA) of the **Widening of Baraiyerhat-Heanko-Ramgarh Road Project** under the Roads and Highways Department, subject to fulfilling the following terms and conditions:

1. The project authority shall conduct a comprehensive Environmental Impact Assessment (EIA) considering the overall activity of the said project in accordance with the ToR submitted to the Department of Environment (DoE). The EIA study shall be conducted as per the provisions laid down in the Environmental Conservation Rules, 2023.
2. The EIA report shall be prepared in accordance with the guidelines provided in Schedule 11 and Rules 15 and 16 of the ECR, 2023.
3. A detailed **Hill Cutting Management Plan** shall be submitted along with the**EIA Report.**
4. Multidisciplinary experts are required in the study team to prepare the EIA report.
5. Consultation with Stakeholders/Public Consultation should be done in accordance with Rule 16 of the Environmental Conservation Rules, 2023.
6. As per Rule 16 of the ECR'23, a soft copy of the draft EIA report shall be sent to the DoE (mimshameem@gmail.com and nrahmanasif@gmail.com) in order to publish the report on the DoE's website for public comments.
7. Without approval of the EIA report by the Department of Environment, the project authority shall not make any land and infrastructure development.

01-10-2026
Masud Iqbal Md Shameem
Director
Phone : 222218342
E-mail : direc@doe.gov.bd

Continue - 1 of 2

Project Director, Widening of Baraiyerhat-Heanko-Ramgarh Road Project
Roads & Highways, Chattogram Roads Circle, Rahmatganj, Chattogram.



Continue - 2 of 2





Annex-2: Present Condition of the Project Area





















Annex-3: FGD Attendance Sheet

GOVERNMENT OF THE PEOPLE'S REPUBLIC OF BANGLADESH
Roads And Highway Department, RHD

Widening of Baraiyerhat – Heako –Ramgarh Road.

Attendance of Local Participants in the Screening Exercise
Local Stockholders, Community Members

District: চট্টগ্রাম Upazilla: মীরসরাই

Pourashava/Union: করেরহাট Date: 28/03/2022

SL	Name	Gender	Social Status	Contact Number	Signature
১	মো: এনায়েত হোসেন নয়ন		চেয়ারম্যান	01715413561	[signature]
২	দিদারুল আলম	পুরুষ	ব্যবসা	01845834250	[signature]
৩	আলি নেওয়াজ	"	চাকুরী	01871520833	[signature]
৪	রানা	"	ব্যবসা	01834876434	[signature]
৫	NAZRUL	"	চাকুরী	01824005992	[signature]
৬	জহির	"	চাকুরী	01813989423	[signature]
৭	মোস্তাফা	"	ড্রাইভার	01826671266	[signature]
৮	ফকরুল আলম	"	চাকুরী	01811842914	[signature]
৯	শাহ আলম	"	ব্যবসা	01819673424	[signature]
১০	জয়নাল আবেদীন	"	চাকুরী	01862662882	জয়নাল
১১	হুকশার	"	ব্যবসা	01829504450	হুকশার
১২	আবুল কাশেম	"	ব্যবসা	01819509640	[signature]
১৩	মো. জাফর	"	কৃষি	0+	জাফর
১৪	ইউসুফ	"	লেবার	—	—
১৫	মো: আকাশ	"	সচিব	01815361883	[signature]
১৬	রেজাউল হক	"	কৃষি	01819306544	রেজাউল হক
১৭	খোরশেদ	"	ব্যবসা	01812673052	খুরশিদ আলম
১৮	স্বপন কর্মকার	"	প্রবাসী	01881635640	SAWPAN K.K.

মোঃ এনায়েত হোসেন নয়ন
চেয়ারম্যান
১নং করেরহাট ইউনিয়ন পরিষদ
মীরসরাই, চট্টগ্রাম।

24.03.22.

মোঃ এনায়েত হোসেন নয়ন
চেয়ারম্যান
১নং করেরহাট ইউনিয়ন পরিষদ

Widening of Baraiyerhat – Heako –Ramgarh Road.

Attendance of Local Participants in the Screening Exercise
Local Stockholders, Community Members

District: চট্টগ্রাম Upazilla: মীর সরাই

Pourashava/Union: বারের হাট Date: 28/03/2022

SL	Name	Gender	Social Status	Contact Number	Signature
১৯	ইরশাদ উল্লাহ	পুরুষ	চাকুরী	01874110161	[signature]
২০	মোঃ মাহবুব উদ্দিন	"	কৃষক	01813154604	Muddin
২১	মোঃ আবদুল [illegible]	[illegible]	[illegible]	01818511193	[signature]
২২	মাহবুব উদ্দিন	"	কৃষক	01819-645427	[signature]
২৩	মোঃ [illegible]			01815923185	[signature]
২৪	মোঃ [illegible]	"	কৃষক [illegible]	01851333349	[signature]
২৫	কৃষ্ণ উপনাথ	"	গ্রামপুলিশ	01829628039	[signature]
২৬	বিষ্ণু উপনাথ	"	গ্রামপুলিশ	01883548297	[signature]
২৭	মোঃ শহীদ উল্লাহ	পুরুষ	কৃষক	01884753459	[signature]

মাঈন উদ্দিন
সদস্য-২ ওয়ার্ড
[illegible] ইউনিয়ন পরিষদ
[illegible], মীরসরাই, চট্টগ্রাম

[signature]
24.03.22.
মোঃ এনায়েত হোসেন নয়ন
চেয়ারম্যান
[illegible] ইউনিয়ন পরিষদ
লোয়ারগঞ্জ, মীরসরাই, চট্টগ্রাম।

GOVERNMENT OF THE PEOPLE'S REPUBLIC OF BANGLADESH
Roads And Highway Department, RHD

Widening of Baraiyerhat – Heako –Ramgarh Road.

Attendance of Local Participants in the Screening Exercise
Local Stockholders, Community Members

District: চট্টগ্রাম Upazilla: ফটিকছড়ি

Pourashava/Union: বাগানবাজার Date: ২৫/০৩/২০২২

SL	Name	Gender	Social Status	Contact Number	Signature
১.	শাহাদত হোসেন সাজু	পুরুষ	চেয়ারম্যান বাগানবাজার	01625544385	[signature]
২.	সিরাজুল ইসলাম	"	ব্যবসা	01811517638	[signature]
৩.	মোঃ মনি উজ্জাহ মোঃ	"	"	01844848504	[signature]
৪.	শরীফ	"	ড্রাইভার	01818633293	মোঃ [signature]
৫.	আমীর হোসেন	"	ছাত্র	01831315570 36	আমির
৬.	পবন	"	ব্যবসা	01817662882	পবন
৭	রাজা মিয়া	"	ব্যবসা	01829836974	[signature]
৮	সেলিম	"	ড্রাইভার	01840218980	[signature]
৯	অমিত হাসান	"	ছাত্র	01814343311	অমিত হাসান
১০.	রাজীব	"	ছাত্র	01834582737	[signature]
১১.	মোক্তার হোঃ	"	ব্যবসা	01853156206	[signature]
১২	নজরুল ইসলাম	"	ব্যবসা	01815424419	নজরুল ইসলাম
১৩.	আবদুল্লাহ	"	ডাক্তার	01818137084	[signature]
১৪.	মান্নান	"	লেবার	01879404288	মন্নান
১৫	নয়ন	"	মিস্ত্রী	01867018412	নয়ন
১৬	আনোয়ার হোসেন	"	ড্রাইভার	01839979841	[signature]
১৭	জলিল	"	ছাত্র	01833931747	Julil
১৮.	সাহাবুদ্দিন	"	ড্রাইভার	01610528309	[signature]

মোঃ শাহাদত হোসেন সাজু
চেয়ারম্যান
বাগান বাজার ইউনিয়ন পরিষদ
ফটিকছড়ি, চট্টগ্রাম

GOVERNMENT OF THE PEOPLE'S REPUBLIC OF BANGLADESH
Roads And Highway Department, RHD

Widening of Baraiyerhat – Heako –Ramgarh Road.

Attendance of Local Participants in the Screening Exercise
Local Stockholders, Community Members

District: [illegible] Upazilla: [illegible]

Pourashava/Union: [illegible] Date: 26/06/2022

SL	Name	Gender	Social Status	Contact Number	Signature
19	[illegible]	[illegible]	[illegible]	01815178450	[illegible]
20	[illegible]	"	"	01875108153	[illegible]
21	[illegible]	"	"	01641400287	[illegible]
22	[illegible]	"	[illegible]	01870075521	[illegible]
23	[illegible]	"	[illegible]	01823966278	Jahid
24	[illegible]	"	[illegible]	01815179590	[illegible]

Annex-4: Ambient Air Quality Monitoring Report

(Pre-Construction)

Air & Noise



ENVIRONMENTAL MONITORING REPORT

Project Title

Improvement of Baraiyerhat-Heako-Fatikchori Road (R-151) and Heyako-Ramgarh Road (R-152)

Site Location: Baraiyerhat & Ramgarh, Chattogram

Technical Support From

Adroit Environment Consultants Ltd.

House 01, Road 16, Sector 07, Uttara, Dhaka- 1230

AECL LABORATORY ANALYSIS REPORT

Project	:	**Improvement of Baraiyerhat-Heako-Fatikchori Road (R-151) and Heyako-Ramgarh Road (R-152)**
Location	:	**Baraiyerhat & Ramgarh, Chattogram**
Clientele	:	**E-Engineering Limited**

Description of sample	:	**Ambient Air & Ambient Noise**
Sample collector	:	**AECL Monitoring Team**
Sampling date	:	**22nd to 23rd March, 2022**
Reporting date	:	**30th May, 2022**

Contents _Toc96860574

1.0 Introduction 4
2.0 Sampling Details 7
3.0 Monitoring Team Composition 8
4.0 Air Quality Monitoring 8
5.0 Methodology 10
7.0 Terminology 11
8.0 Comment 11
9.0 Noise Level Monitoring 12
10.0 Comment 14

List of Tables

Table 1: Monitoring Stations 7
Table 2: Ambient Air Sampling Time Schedule 8
Table 3: Chief Personnel 8
Table 4: Supporting Staff 8
Table 5: Ambient Air Quality Analysis Result 11
Table 6: Instrument Specification (Noise Meter) 13
Table 7: Noise Level Data 14

List of Figures

Figure 1: Monitoring Locations 6
Figure 4.1: AQ-150 Monitor 11
Figure 3: Wensn WS 1361C 12
Figure 4: Monitoring Photographs 19

List of Annexures

Annexure 1: Analysis Reports
Annexure 2: Photo Gallery
Annexure 3: Sampling Data Sheet

1.0 Introduction

1.1 Background

A memorandum of Understanding between the Government of the People's Republic of Bangladesh (GOB) and Government of the Republic of India (GOI) for Extending a 3rd Line of Credit (LOC) was signed on 5th April 2017 at New Delhi. The widening of Ramgarh to Baryarhat Project was included in this LOC-III. This Project will open a new door for increment of trade/business between BD and India. Sabrum/Ramgarh land port will open huge opportunities for both the countries. This widening project of highway which is connected between Sabrum/Ramgarh Land Port to Baryarhat will help the neighboring countries for raising business. Besides of Baryarhat is also significant. This Point is only 72 km far away from Chattogram port and only 201 km distant from Dhaka city. So the widening project will be able to maintain a connection between Chattogram Port and Ramgarh Land Port. Total Length of the project is 38.00 km.

The existing road network will be improved and the target of preservation and repair of existing road networks and expansion and development targets will be implemented to achieve the target of govt. vision 2021. Total Cost of project is TK. 84553.03 Lac (US$ 99.59 million). The project will be funded by GoB & Indian LoC-III.

1.2 Location of the Project

Total 38 km rode will be improved under this project. Baraiyerhat-Heako-Fatikchori Road (R-151) is 20 km and Heyako-Ramgarh Road (R-152) is 18 km length. Starting Point of project: Baraiyerhat (Ch: 0+00 , from Dhaka- Chattogram National Highway) and end point of the road is Ramgarh Bazar.

1.3 Objective of the Study

The objective of the environmental monitoring is to record the initial environmental status of the project area. The baseline data shall in turn help to address any unexpected or unforeseen environmental impacts that may arise during construction and operation phases of the project.

1.4 Scope of Work

This environmental quality (air & noise) test report has been prepared according to the instruction provided by the client. Following important features has been considered as the scope of the environmental quality monitoring report:

- The ambient air quality monitoring at 3 locations of the above-mentioned project.
- The ambient noise level monitoring at 12 locations of the above-mentioned project.
- Preparation of ambient air quality and ambient noise level monitoring report.

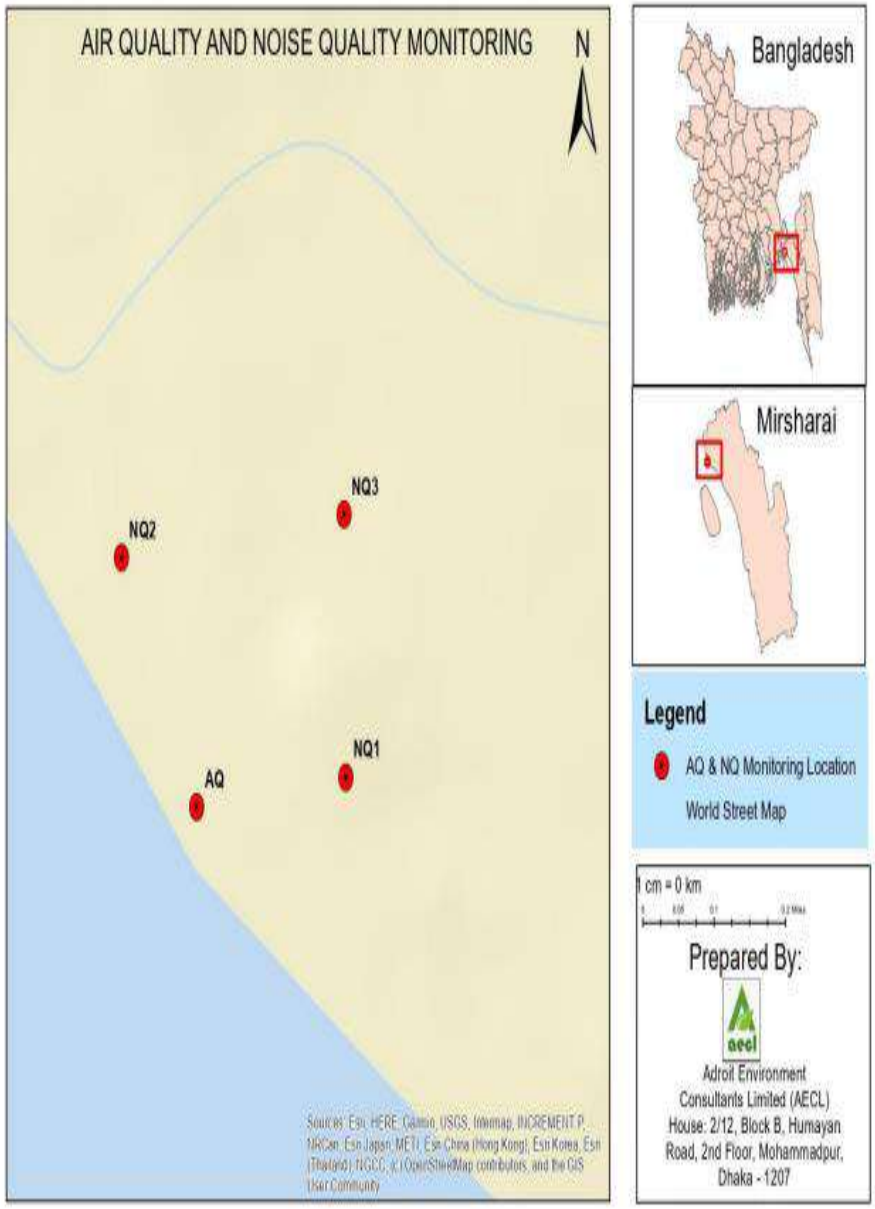

Figure 1: Monitoring Locations

2.0 Sampling Details

Proper personal safety was maintained citing the pandemic COVID19 situation. Use of PPE and other necessary means of protections has been taken efficiently. Air samples were collected in the aforementioned locations on site for 8 consecutive hours. Noise level was monitored on both day and night value basis for 15 minutes sampling time.

Table 1: Monitoring Stations

Station	Station ID	Sample Criteria	GPS Coordinates
	Ambient Air		
Korerhat Road, Mirsorai, Chittagong	AQ1	Air & Noise	22°54'06.8"N; 91°32'24.7"E
Bagan Bazar, Fotikchori, Chittagong	AQ2	Air & Noise	22°58'52.3"N; 91°42'24.7"E
Yeako Bazar, Bhujpur, Chittagong	AQ3	Air & Noise	22°53'41.5"N; 91°40'38.1"E
	Ambient Noise		
Korerhat Road, Mirsorai, Chittagong	NQ1	Air & Noise	22°54'06.8"N 91°32'24.7"E
East Hinguli, Mirsorai, Chittagong	NQ2	Air & Noise	22°54'03.2"N 91°32'40.9"E
Baroiyarhat Pouro Shova, Chittagong	NQ3	Air & Noise	22°53'39.2"N 91°32'06.3"E
Bagan Bazar, Fotikchori, Chittagong	NQ4	Air & Noise	22°58'52.3"N 91°42'24.7"E
Mohamoni, Ramgor, Chittagong	NQ5	Air & Noise	22°59'35.5"N 91°43'28.8"E
Baghmara, Bhujpur, Fotikchuri, Chittagong	NQ6	Air & Noise	22°57'29.6"N 91°41'20.5"E
Cikonchora, Fotikchora, Chittagong	NQ7	Air & Noise	22°56'59.6"N 91°40'58.2"E
Taltola, Ramgarh, Chittagong	NQ8	Air & Noise	22°57'51.5"N 91°41'59.7"E

Yeako Bazar, Bhujpur, Chittagong	NQ9	Air & Noise	22°53'41.5"N 91°40'38.1"E
Kalopani Bazar, Chittagong	NQ10	Air & Noise	22°55'11.3"N 91°36'58.0"E
Koyla Bazar, Jorargonj, Chittagong	NQ11	Air & Noise	22°54'11.7"N 91°37'47.1"E
Islampur, Bhujpur, Chittagong	NQ12	Air & Noise	22°56'36.0"N 91°40'30.3"E

Table 2: Ambient Air Sampling Time Schedule

Station ID	Date	Time started	Time ended	Duration
AQ1	22/03/2022	2.30pm	10.40pm	8 hours 10 minutes
AQ2	23/03/2022	7.50am	4.00pm	8 hours 10 minutes
AQ3	23/03/2022	4.30pm	11.40pm	8 hours 10 minutes

3.0 Monitoring Team Composition

Table 3: Chief Personnel

Name	Position
Dr. Nasir Uddin Khan	Senior Environment Expert (Team Leader)
Md. Saiful Islam	Senior Safety & Health Officer

Table 4: Supporting Staff

Name	Position/ Title
Md. Faisal Bin Mahmud	Coordinator/ Analyst
Md. Kamal Uddin	Environment Engineer

4.0 Air Quality Monitoring

4.1 Introduction

Air pollution is the change in the natural composition of the air we breathe, beyond some defined limits. This change is induced by releasing harmful substances into the atmosphere and it causes damage to our health and environment. Natural sources of air

4.2 Basic of Different parameters

The main pollutants that can affect human health are often known as "criteria" pollutants and these include:

4.2.1 Particulate matter

Particulate matter is the general term used to describe a mixture of solid and liquid particles in air including dust, soot, smoke, and dirt. PM_{10} is particulate matter less than 10 microns in aerodynamic diameter and is often called the coarse fraction. $PM_{2.5}$ is particulate matter less than 2.5 microns (about 0.0001 inch) in aerodynamic diameter and is often called the fine fraction. PM_{10} and $PM_{2.5}$ particles are small enough to penetrate into and accumulate in the respiratory system. Exposure can cause respiratory morbidity, impaired lung function and irritation. It is also carcinogenic. This pollution is sometimes referred to as "black carbon pollution". Suspended particulate matter (SPM) are finely divided solids or liquids that may be dispersed through the air from combustion processes, industrial activities or natural sources.

4.2.2 Oxides of Nitrogen

Nitrogen dioxide (NO_x) is a noxious gas, highly reactive and it is formed when fuel is burned at high temperature. The main sources are motor vehicles, power plants and industrial boilers. Nitrogen dioxide can cause respiratory problems. It can also take part in the chemical reactions in the atmosphere to form corrosive nitric acid and can also react with sunlight to form ground level ozone. Long term exposure can decrease lung function, increase the risk of respiratory conditions and increases the response to allergens. NO_x also contributes to the formation of fine particles (PM) and ground level ozone, both of which are associated with adverse health effects.

4.2.3 Carbon monoxide

Carbon monoxide (CO) is a gas that is slightly lighter than air and is formed when carbon in fuel is not burned completely. In urban areas, almost all CO is produced by motor vehicles. Exposure to CO can disrupt the supply of oxygen to the body tissue, cause neurobehavioral effects and cardiovascular problems.

4.2.4 Sulfur dioxide

Sulfur dioxide (SO_x) is a gas that is often produced in the burning of fossil fuels containing Sulphur. It can cause respiratory problems and damage vegetation. Sulfur dioxide

dissolves easily in water and therefore can contribute to acid rain, once it released into the atmosphere.

4.2.5 Ozone

Ozone is a gas composed of three atoms of oxygen. Ozone occurs both in the Earth's upper atmosphere and at ground level. Ozone at ground level or ambient ozone is a harmful air pollutant and highly reactive in nature. It has adverse effects on people and the environment, and it is the main ingredient of smog.

5.0 Methodology

Particulate monitoring is accomplished with a digital air quality monitoring sensor. It utilizes an optical layout consisting of an infrared emitter and silicon detector. As particles enter the sensing area an analog output, current or voltage, provides a signal which is proportional to the particle concentration.

5.4.1 Equipment Used

AQ-150 air quality stations deliver precise measurement data in real-time for a wide range of air pollutants in a discreet & compact package. Measurable parameters include: Ozone(O_3), Nitrogen dioxide (NO_2), Nitrogen oxide (NO_x), Carbon monoxide (CO), Carbon dioxide (CO_2); Sulphur dioxide (SO_2), Volatile organic compounds (VOC), and particulate matter by mass (PM_{10} and $PM_{2.5}$) or size distribution (0.3 to 10 µm, 8 channels).

AQ-150 sensors can also be integrated to measure temperature, humidity, wind speed, wind direction, environmental noise, solar radiation and other meteorological parameters. Data is stored on internal memory and is remotely accessible in real-time via GSM modem, low power radio, Ethernet or other communications.



Figure 4.1: AQ-150 Monitor

Table 5: Ambient Air Quality Analysis Result

SL. No.	Parameters	Method	Test Duration (Min)	Unit	AQ1	AQ2	AQ3	DoE, Std.	IFC /WB Std.
1	$PM_{2.5}$	Gravimetric	1440	µg/m³	59.28	53.85	64.18	65[a]	75[a]
2	PM_{10}	Gravimetric	1440	µg/m³	90.38	85.88	91.07	150[a]	150[a]
3	SPM	Gravimetric	480	µg/m³	164.86	159.36	179.0	200[c]	NF
4	SO_2	West-Geako	1440	µg/m³	21.82	16.93	17.37	365[b]	125[a]
5	NO_x	Jacob and Hochheiser	1440	µg/m³	46.59	40.44	31.18	100[b]	200[c]
6	CO	CO Sensor	480	ppm	2	1	1	9[c]	NF
7	O_3	O_3 Sensor	480	µg/m³	53	28	67	157[c]	160[c]

(NF – not found, DoE – Department of Environment.), *1 hour standard Not Found, a= standard for 24 hours exposure, b= standard for yearly exposure, c= standard for 8 hours exposure.

7.0 Terminology

1. Fine Particulate Matter ($PM_{2.5}$), 2. Respirable Dust Content (PM_{10}), 3. Suspended Particulate Matter (SPM) & 8. DoE- Department of Environment, NF – Not found.

8.0 Comment

Particulate matters, oxides of Sulphur and Nitrogen and gaseous pollutants i.e., Lead, Ozone and Carbon monoxide concentrations were estimated in the areas under study. From the above analysis, it is discernible that all the stations conform to the given DoE, Bangladesh and IFC/WB standard limit in terms of the tested parameters.

9.0 Noise Level Monitoring

Noise quality is measured instantly on the site by Wensn WS 1361C Digital Sound Level Meter. At each location noise data is taken for 15 minutes during both day and night separately. At the time of measurement, whenever there is an interfering effect like mike noise, human voice from house and bazaar, vehicular sound, sound of machine and tool from workshop etc. are also recorded.

9.1 Monitoring of Noise Level

Noise is an important environmental pollutant. A survey by the U S. Federal Council of Science and Technology has revealed that noise is a technology generated problem and that the overall loudness of environmental noise doubles every ten years in pace with our social and industrial progress.

Measurement of noise—Noise is a combination of intensity and frequency and can be measured in decibels. Decibel is a unit of sound, named after Alexander Graham Bell. The level of sound is usually expressed in terms of the Sound Pressure Level in decibels, which is defined as:

SPL = 20 log10 P/ Po dB

Where P is the pressure variation measured in N/m2 & P0 is the standard reference pressure taken as 2x 10 – 5 N /m2.



Figure 3: Wensn WS 1361C

9.2 Monitoring procedure of noise level

Noise quality has been measured instantly on the site by Noise level meter. At each location multiple readings were taken over a short period of time (both night & day) to calculate the L_{eq} value. Two measurements such as maximum & minimum value were published. At the time of measurement, whenever there was an interfering effect like mike noise, human voice, vehicular sound, sound of machine and tool from workshop etc., were also recorded.

Table 6: Instrument Specification (Noise Meter)

Design Standards	Specification
Measuring Range	30~130 dBA or 35~130 dBC
Frequency Weighting	A and C
Time Weighting	Fast & Slow
Linearity Weighting	50 dB
Resolution	0.1 dB
Sample rate	2 times/second

Table 7: Noise Level Data

SN.	Station ID	Site Condition	Receptor Type	Concentration present (L_{eq}) dBA					
				Day Time			Night Time		
				Min.	Max.	L_{eq}	Min.	Max.	L_{eq}
01	NQ1	Preconstruction Phase	Commercial	58.2	66.7	63.4	48.2	55.4	52.1
02	NQ2		Residential	51.1	58.2	57.3	43.2	49.7	46.3
03	NQ3		Commercial	51.1	59.2	58.4	50.0	57.7	54.0
04	NQ4		Commercial	51.2	58.1	55.6	46.2	48.1	47.1
05	NQ5		Mixed	52.8	63.3	61.3	44.2	57.4	54.3
06	NQ6		Commercial	55.3	67.3	65.9	47.6	57.1	54.6
07	NQ7		Residential	49.1	66.2	59.2	51.3	53.7	51.8
08	NQ8		Residential	50.1	58.3	53.2	47.1	49.3	48.2
09	NQ9		Commercial	52.9	59.1	56.6	49.8	52.3	50.5
10	NQ10		Mixed	56.2	65.4	62.9	48.1	58.2	53.0
11	NQ11		Commercial	57.6	69.7	60.3	51.2	59.1	54.6
12	NQ12		Residential	55.2	62.3	61.0	47.1	55.8	52.8
DoE (Bangladesh) Standard for Residential Area				**50**			**40**		
DoE (Bangladesh) Standard for Commercial Area				**70**			**60**		
DoE (Bangladesh) Standard for Mixed Area				**60**			**50**		
IFC/International Standard for Industrial/Commercial Zone				**70**			**70**		
IFC/International Standard for Residential area				**55**			**45**		

**** Max= Maximum Value, Min= Minimum Value, Avg= Average L_{eq} Value, DoE= Department of Environment, IFC= International Finance Corporation, WB= World Bank, dBA= Noise Level Unit*

10.0 Comment

From the results it is found that, stations NQ2, NQ5, NO7, NQ8, NQ10 & NQ12 don't conform to the standards.

Annexure 2- Photo Gallery



Korerhat Road, Mirsorai (AQ1)

Bagan Bazar, Fotikchori (AQ2)



Yeako Bazar, Bhujpur (AQ3)





Korerhat Road, Mirsorai (NQ1)





East Hinguli, Mirsorai (NQ2)





Baroiyarhat Pouro Shova (NQ3)





Bagan Bazar, Fotikchori (NQ4)





Mohamoni, Ramgor (NQ5)





Baghmara, Bhujpur (NQ6)





Cikonchora, Fotikchora (NQ7)

Taltola, Ramgarh (NQ8)





Yeako Bazar, Bhujpur (NQ9)



Kalopani Bazar, Chittagong (NQ10)



Koyla Bazar, Jorargonj (NQ11)



Islampur, Bhujpur (NQ12)

Figure: Monitoring Photographs

TerraSafe Systems

A House of Consultancy Services for Environment,Social and Detail Engineering Design Solution.

ISO 9001:2015 CERTIFIED

Ref: EQMR/TSS/15102026/89

AMBIENT AIR QUALITY TEST REPORT

Project Name	: Widening of Baraiyerhat-Heako-Ramgarh Road project (LOC-III)
Project Location	: Chattogram
Sample Collector	: Terrasafe Systems
Sampling Date	: 4-6th October 2026
Sampling Equipment	: Forest Micro Environmental Air Quality Monitoring Station
Equipment Model No	: JYKQWZNEW01 & JYKQWZNEW02
Reporting Date	: 15th October 2026
Client	: Roads and Highways Department (RHD), Chattogram Road Circle, Chattogram.

Sampling Location and Station ID with GPS

Station ID	Station Location Name	Latitude and Longitude	Date	Duration
AQS 1	Baraiyarhat Bazar, Baraiyarhat Paurashava, Ward-03, Mirsharai, Chattogram	22°53'41.8"N 91°32'11.1"E	4th October 2026	8 hours
AQS 2	Madartoli, Union: Baganbazar, Ward-06, Fotikchori, Chattogram	22°55'18.9"N 91°40'32.6"E	5th October 2026	8 hours
AQS 3	Ramghar bazar, Ramghar Paurashava, Ward-09, Khagrachari	22°59'56.4"N 91°44'06.8"E	5th October 2026	8 hours
AQS 4	Koylar Mukh BGB Camp, Union: Kararhat, Mirsharai, Chattogram	22°55'22.3"N 91°36'25.4"E	5-6th October 2026	8 hours

Description of Analysis

SL. No.	Parameters	Method	Test Duration (h)	Unit	Concentration				DoE, Standards	IFC /WB Standards
					AQS 1	AQS 2	AQS 3	AQS 4		
1	$PM_{2.5}$	Optical Laser scattering sensors	8	µg/m³	63.5	47	60.5	64.89	65[a]	75[a]
2	PM_{10}	Optical Laser scattering sensors	8	µg/m³	102.38	69	107.75	115.38	150[a]	150[a]
3	SPM	Optical Laser scattering sensors	8	µg/m³	243.13	235	247.5	245	NS	NS
4	SO_2	Electrochemical Gas Sensors	8	µg/m³	2.59	2.02	2.65	3.15	80[a]	125[a]
5	NO_x	Electrochemical Gas Sensors	8	µg/m³	20.25	15.65	19.40	17.93	80[a]	200[a]
6	CO	Electrochemical Gas Sensors	8	mg/m³	1.62	1.39	1.74	2.62	5[b]	NS
7	O_3	Electrochemical Gas Sensors	8	µg/m³	38.57	36.87	39.87	42.53	100[b]	160[b]
8	CO_2	Non-dispersive Infra-red sensors	8	mg/m³	947.5	944.5	975.13	992.5	NS	NS

AQS1-AQS2= Assigned Station ID, (NS – Not Set, DoE – Department of Environment; IFC- International Finance Corporation; WB- The World Bank; a= standard for 24 hours exposure, b= standard for 8 hours exposure, c= standard for 1 hour exposure)

Comment- After analyzing the air quality monitoring data it can be concluded that air quality at all sample locations were within standard limits.

Md Showrav
Jr. Environmental Engineer

TerraSafe Systems ★ Kazipara, Mirpur, Dhaka-1216 ★

Mahmudul Hasan
Head of Safeguard

House: 755 (2nd Floor), West Kazipara, Mirpur, Dhaka-1216, Bangladesh

01710-175232/ 01849-705175/ 01407-107018 tssllab01@gmail.com orterrasafesystems@gmail.com

Annex-5: Ambient Noise Level Test Report

(Ongoing Construction Period)

TerraSafe Systems
A House of Consultancy Services for Environment,Social and Detail Engineering Design Solution.
ISO CERTIFIED

Ref: EQMR/TSS/15102026/89

AMBIENT NOISE LEVEL TEST REPORTS

Project Name : Widening of Baraiyerhat-Heako-Ramgarh Road project (LOC-III)
Subproject Location : Chattogram
Sample Collector : TerraSafe Systems Monitoring Team
Sampling Date : 4-5th October 2026
Sampling Equipment : Lurton Noise Level Meter
Equipment Model No : SL-4023SD
Reporting Date : 15th October 2026
Client : Roads and Highways Department (RHD), Chattogram Road Circle, Chattogram.

Sampling Location and Station ID with GPS

Station ID	Station Location Name	Latitude and Longitude	Date
NS 1	Baraiyarhat Bazar, Baraiyarhat Paurashava, Ward-03, Mirsharai, Chattogram	22°53'41.91"N 91°32'11.43"E	4th-5th October 2026
NS 2	Madartoli, Union: Baganbazar, Ward-06, Fotikchori, Chattogram	22°55'18.83"N 91°40'32.57"E	4th-5th October 2026
NS 3	Ramghar bazar, Ramghar Paurashava, Ward-09, Khagrachari	22°59'56.56"N 91°44'6.72"E	4th-5th October 2026
NS 4	Bagan bazar, Union: Bagan bazad, Ward-01, Fotikchori, Chattogram	22°58'52.4"N 91°42'25.0"E	4th-5th October 2026
NS 5	Bagmara, Union: Bagan bazar, Ward-04, Fotikchori, Chattogram	22°57'33.4"N 91°41'23.4"E	5th October 2026
NS 6	Heyako, Union: Datmara Ward-2, Fotikchori, Chattogram	22°53'29.6"N 91°40'17.3"E	5th October 2026
NS 7	Koyla, Union: Kararhat, Ward-06, Mirsharai, Chattogram	22°54'09.5"N 91°38'00.0"E	5th October 2026
NS 8	KoylaR Mukh BGB Camp, Union: Kararhat, Mirsharai, Chattogram	22°55'22.39"N 91°36'25.14"E	5th October 2026
NS 9	Forest office, Union: Kararhat, Ward-05	22°55'33.7"N 91°34'39.9"E	5th October 2026
NS 10	Hinguli more, Union: Kararhati, Ward-02, Mirsharai, Chattogram	22°55'09.5"N 91°33'01.9"E	5th October 2026

Description of Analysis

Sample ID	Receptor Type	Concentration present (LAeq) dBA					
		Day Time			Night Time		
		Max.	Min.	Leq	Max.	Min.	Leq
NS 1	Commercial Area	72.7	54.4	65.7	60.6	45.2	53.4
NS 2	Mixed Area	62.9	45.7	56	49.8	35.3	44.7

House: 755 (2nd Floor), West Kazipara, Mirpur, Dhaka-1216, Bangladesh
01710-175232/ 01849-705175/ 01407-107018 tsslab01@gmail.com or terrasafesystems@gmail.com

TerraSafe Systems

A House of Consultancy Services for Environment,Social and Detail Engineering Design Solution.

ISO CERTIFIED

Ref: EQMR/TSS/15102026/89

NS 3	Commercial Area	77.2	54.3	67.6	49.1	35.7	44.4
NS 4	Commercial Area	72.5	54.5	66.6	46.5	35.2	42.5
NS 5	Residential area	62.2	45.1	54.9	42.8	34.2	38.7
NS 6	Commercial Area	72.7	52.7	67.8	43.3	32.9	39.3
NS 7	Silence Area	63.3	35.7	49.9	44.2	34.4	38.9
NS 8	Mixed Area	62.9	45.2	57.3	49.6	35.5	43.8
NS 9	Silence Area	61.1	33.1	49.3	43.1	32.2	39.2
NS 10	Mixed Area	68.6	44.1	59.2	44.9	31.3	38.9
DoE (Bangladesh) Standard for Commercial Area		70			60		
DoE (Bangladesh) Standard for Residential Area		55			45		
DoE (Bangladesh) Standard for Mixed Area		60			50		
DoE (Bangladesh) Standard for Silence Zone		50			40		
IFC/International Standard for Industrial/Commercial Zone		70			70		
IFC/International Standard for Residential area		55			45		

Comment- After analyzing the noise level data it can be concluded that noise level at all sample locations were within standard limits.

TerraSafe Systems ★ Kazipara, Mirpur, Dhaka-1216 ★

Md Showrav
Jr. Environmental Engineer

Mahmudul Hasan
Head of Safeguard

House: 755 (2nd Floor), West Kazipara, Mirpur, Dhaka-1216, Bangladesh

01710-175232/ 01849-705175/ 01407-107018 tssllab01@gmail.com or terrasafesystems@gmail.com

Annex-6: Surface Water Quality Test Report

(Pre-Construction Stage)

Tel: 58154273, 58154274
Fax: 880-2-9141234
E-mail: wqtl@ngof.org
Website: www.ngof.org

Water Quality Testing Laboratory

Drink Safe Water Save Life

Chemical/Bacteriological/Physical Analysis of Water Samples

WQTL Code: Z-55

Ref.: **WQTL/209 - 263/22** Date: **3-Apr-22** Sample Code: Z55-3/4

Date of Sample Receiving: **27-Mar-22**

Sample(s) Sent By: **Imam and Associate, Dhaka, Bangladesh.**

Project Name: **Widening of Baraiyerhat – Heako – Ramgarh Road.**

General Information of Samples:

Technology/Sample Source: **Surface Water (Hinguni River)**

Tested parameters: **pH, Turbidity, TDS, DO, Nitrate, Chloride, Phosphate, Sulfate, TSS, COD, BOD_5 20°C & Conductivity.**

Location of Water Point: **Vill.: Hinguni, Union: Karerhat, Upazilla: Mirer Sorai, Dist.: Chittagong**

TEST RESULTS

Sample ID: **Sample-SL (Sample-3)**

Name of Parameters	Concentration Present	Drinking Water Quality Standard (ECR '97 – Bangladesh)	Unit
pH	6.9	**6.5 - 8.5**	-
Turbidity	<1	**10**	NTU
TDS	130	**1,000**	mg/L
DO	5.8	**6**	mg/L
Nitrate	4.2	**10**	mg/L
Chloride	<60	**150 - 600**	mg/L
Phosphate	0.1	**6**	mg/L
Sulphate	<1	**400**	mg/L
TSS	<2	**10**	mg/L
COD	1.3	-	mg/L
BOD_5 20°C	0.2	**0.2**	mg/L
Conductivity	257	-	(µS/cm)

Report Prepared & Checked by -

Md. Ibrahim Khalil
Sr. Chemist

S. M. Shahidullah
Head of Env. & WQ Management

NGO FORUM FOR PUBLIC HEALTH

Tel: 58154273, 58154274
Fax: 880-2-9141234
E-mail: wqtl@ngof.org
Website: www.ngof.org

Water Quality Testing Laboratory

Drink Safe Water Save Life

Chemical/Bacteriological/Physical Analysis of Water Samples

WQTL Code: Z-55

Ref.: **WQTL/209 - 263/22** Date: **3-Apr-22** Sample Code: Z55-1/4

Date of Sample Receiving: **27-Mar-22**

Sample(s) Sent By: **Imam and Associate, Dhaka, Bangladesh.**

Project Name: **Widening of Baraiyerhat – Heako – Ramgarh Road.**

General Information of Samples:

Technology/Sample Source: **Surface Water (Feni River)**

Tested parameters: pH, Turbidity, TDS, DO, Nitrate, Chloride, Phosphate, Sulfate, TSS, COD, BOD_5 20°C & Conductivity.

Location of Water Point: **Vill.: Bangan Bazar, Union: Bagan Bazar, Upazilla: Fotikchori, Dist.: Chittagong**

TEST RESULTS

Sample ID: **Sample-SL (Sample-1)**

Name of Parameters	Concentration Present	Drinking Water Quality Standard (ECR '97 – Bangladesh)	Unit
pH	7.2	**6.5 - 8.5**	-
Turbidity	<1	**10**	NTU
TDS	111	**1,000**	mg/L
DO	5.7	**6**	mg/L
Nitrate	22.88	**10**	mg/L
Chloride	<60	**150 - 600**	mg/L
Phosphate	0.1	**6**	mg/L
Sulphate	<1	**400**	mg/L
TSS	<2	**10**	mg/L
COD	2.7	-	mg/L
BOD_5 20°C	0.3	**0.2**	mg/L
Conductivity	218	-	(µS/cm)

Report Prepared & Checked by -

Md. Ibrahim Khalil
Sr. Chemist

S. M. Shahidullah
Head of Env. & WQ Management

NGO FORUM FOR PUBLIC HEALTH

4/6, Block-E, Lalmatia
Dhaka-1207
Tel: 41022234, 41022235
Email: wqtl@ngof.org
www.ngof.org

Water Quality Testing Laboratory

Drink Safe Water Save Life

Chemical/Bacteriological/Physical Analysis of Water Samples

WQTL Code: D-428

Ref.: **WQTL/209 - 426/26** Date: **14-Oct-26** Sample Code: D428-1/5

Date of Sample Receiving: **6-Oct-26**

Client Name: **Roads and Highways Department (RHD), Chattogram Road Circle, Chattogram.**

Sample(s) Sent By: **Infrastructure Department and Management Services (IDMS)**

Project Name: **Widening of Baraiyerhat-Heako-Ramgarh Road Project (LOC-III)**

General Information of Samples:

Technology/Sample Source: **Serface Water (Hinguli River)**

Tested parameters: **pH, Turbidity, Conductivity, TDS, TSS, DO, BOD_5 20°C, COD, Nitrate, Sulphate, Phosphate & Chloride**

Address: **Ward No-08, Municipality: Baraiyarhat, Upazila: Mirsharai, District: Chattogram.**

TEST RESULTS

Name of Parameters	Concentration Present	Drinking Water Quality Standard (ECR '2023 – Bangladesh)	Unit
pH	7.3	6.5 - 8.5	-
Turbidity	2.8	5.0	NTU
Conductivity	260	-	(µS/cm)
TDS	130	1,000	mg/L
TSS	<2	10	mg/L
DO	5.8	6	mg/L
BOD_5 20°C	1.2	0.2	mg/L
COD	5.6	-	mg/L
Nitrate	8.5	45	mg/L
Sulphate	3.0	250	mg/L
Phosphate	0.008	6	mg/L
Chloride	61	250*	mg/L

Report Prepared & Checked by -

Md. Ibrahim Khalil
Sr. Chemist

Md. Ahasan Habib, PhD
Director-Research, Monitoring & Evaluation and Env.& WQ Management

Drink Safe Water Save Life

NGO FORUM FOR PUBLIC HEALTH

4/6, Block-E, Lalmatia
Dhaka-1207
Tel: 41022234, 41022235
Email: wqtl@ngof.org
www.ngof.org

Water Quality Testing Laboratory

Drink Safe Water Save Life

Chemical/Bacteriological/Physical Analysis of Water Samples

WQTL Code: D-428

Ref.: **WQTL/209 - 426/26** Date: **14-Oct-26** Sample Code: D428-2/5

Date of Sample Receiving: **6-Oct-26**

Client Name: **Roads and Highways Department (RHD), Chattogram Road Circle, Chattogram.**

Sample(s) Sent By: **Infrastructure Department and Management Services (IDMS)**

Project Name: **Widening of Baraiyerhat-Heako-Ramgarh Road Project (LOC-III)**

General Information of Samples:

Technology/Sample Source: **Serface Water (Feni River)**

Tested parameters: **pH, Turbidity, Conductivity, TDS, TSS, DO, BOD_5 20°C, COD, Nitrate, Sulphate, Phosphate & Chloride**

Address: **Village: -Darogapara, Ward No: 09, Municipality: Ramgarh, Upazila: Ramgarh, District: Khagrachhari.**

TEST RESULTS

Name of Parameters	Concentration Present	Drinking Water Quality Standard (ECR '2023 – Bangladesh)	Unit
pH	7.2	6.5 - 8.5	-
Turbidity	2.1	5.0	NTU
Conductivity	160	-	(µS/cm)
TDS	80	1,000	mg/L
TSS	<2	10	mg/L
DO	6.0	6	mg/L
BOD_5 20°C	0.8	0.2	mg/L
COD	3.7	-	mg/L
Nitrate	6.2	45	mg/L
Sulphate	5.0	250	mg/L
Phosphate	0.1	6	mg/L
Chloride	<60	250*	mg/L

Report Prepared & Checked by -

Md. Ibrahim Khalil
Sr. Chemist

Md. Ahasan Habib, PhD
Director-Research, Monitoring & Evaluation and Env.& WQ Management

Drink Safe Water Save Life

NGO FORUM FOR PUBLIC HEALTH

Annex-7: Pictures of Surface Water Sample Collection Points

Pre-Construction Stage



Feni River, Fotikchori



Hinguli River, Mirsharai

Ongoing Construction Stage







Hinguli River, Baraiyarhat Paurashava, Ward-08, Mirsharai, Chattogram



Feni River, Darogapara, Ramgarh Paurashava, Ward-09, Khagrachhari

Annex-8: Groundwater Quality Test Report

(Pre-Construction Stage)

Tel: 58154273, 58154274
Fax: 880-2-9141234
E-mail: wqtl@ngof.org
Website: www.ngof.org

Water Quality Testing Laboratory

Drink Safe Water Save Life

Chemical/Bacteriological/Physical Analysis of Water Samples

WQTL Code: Z-55

Ref.: **WQTL/209 - 263/22** Date: **3-Apr-22** Sample Code: Z55-4/4

Date of Sample Receiving: **27-Mar-22**

Sample(s) Sent By: **Imam and Associate, Dhaka, Bangladesh.**

Project Name: **Widening of Baraiyerhat – Heako – Ramgarh Road.**

General Information of Samples:

Technology/Sample Source: Ground Water

Tested parameters: **pH, Turbidity, Hardness, Iron, Manganese, Arsenic, Chloride, Total Coliform (TC), Fecal Coliform (FC) & Salinity.**

Location of Water Point: Vill.: Hinguni, Union: Karerhat, Upazilla: Mirer Sorai, Dist.: Chittagong

TEST RESULTS

Sample ID: **Sample-SL (Sample-4)**

Name of Parameters	Concentration Present	Drinking Water Quality Standard (ECR '97 – Bangladesh)	Unit
pH	6.7	6.5 - 8.5	-
Turbidity	85	10	NTU
Hardness	124	-	mg/L
Iron	9.78	1.0	mg/L
Manganese	0.1	0.1	mg/L
Arsenic	<0.003	0.05	mg/L
Chloride	<60	150 - 600	mg/L
TC	0	0	#/100mL
FC	0	0	#/100mL
Salinity	<100	1,650	mg/L

Report Prepared & Checked by -

Md. Ibrahim Khalil
Sr. Chemist

S. M. Shahidullah
Head of Env. & WQ Management

NGO FORUM FOR PUBLIC HEALTH

Tel: 58154273, 58154274
Fax: 880-2-9141234
E-mail: wqtl@ngof.org
Website: www.ngof.org

Water Quality Testing Laboratory

Drink Safe Water Save Life

Chemical/Bacteriological/Physical Analysis of Water Samples

WQTL Code: Z-55

Ref.: **WQTL/209 - 263/22** Date: **3-Apr-22** Sample Code: Z55-2/4

Date of Sample Receiving: **27-Mar-22**

Sample(s) Sent By: **Imam and Associate, Dhaka, Bangladesh.**

Project Name: **Widening of Baraiyerhat – Heako – Ramgarh Road.**

General Information of Samples:

Technology/Sample Source: Ground Water (Bagan Bazar High School)

Tested parameters: **pH, Turbidity, Hardness, Iron, Manganese, Arsenic, Chloride, Total Coliform (TC), Fecal Coliform (FC) & Salinity.**

Location of Water Point: Vill.: Bangan Bazar, Union: Bagan Bazar, Upazilla: Fotikchori, Dist.: Chittagong

TEST RESULTS

Sample ID: **Sample-SL (Sample-2)**

Name of Parameters	Concentration Present	Drinking Water Quality Standard (ECR '97 – Bangladesh)	Unit
pH	6.9	**6.5 - 8.5**	-
Turbidity	<1	**10**	NTU
Hardness	32	**-**	mg/L
Iron	4.48	**1.0**	mg/L
Manganese	0.25	**0.1**	mg/L
Arsenic	<0.003	**0.05**	mg/L
Chloride	<60	**150 - 600**	mg/L
TC	6	**0**	#/100mL
FC	1	**0**	#/100mL
Salinity	<100	**1,650**	mg/L

Report Prepared & Checked by -

Md. Ibrahim Khalil
Sr. Chemist

S. M. Shahidullah
Head of Env. & WQ Management

NGO FORUM FOR PUBLIC HEALTH

(Ongoing construction period)

4/6, Block-E, Lalmatia
Dhaka-1207
Tel: 41022234, 41022235
Email: wqtl@ngof.org
www.ngof.org

Water Quality Testing Laboratory

Drink Safe Water Save Life

Chemical/Bacteriological/Physical Analysis of Water Samples

WQTL Code: D-428

Ref.: **WQTL/209 - 426/26** Date: **14-Oct-26** Sample Code: D428-3/5

Date of Sample Receiving: **6-Oct-26**

Client Name: **Roads and Highways Department (RHD), Chattogram Road Circle, Chattogram.**

Sample(s) Sent By: **Infrastructure Department and Management Services (IDMS)**

Project Name: **Widening of Baraiyerhat-Heako-Ramgarh Road Project (LOC-III)**

General Information of Samples:

Technology/Sample Source: **Ground Water (Tubewell)**

Tested parameters: **pH, Turbidity, Hardness, Iron, Manganese, Arsenic, TC & FC**

Address: **Village-Karerhat, Ward No-02, Union: Karerhat, Upazila: Mirsharai, District: Chattogram**

TEST RESULTS

Name of Parameters	Concentration Present	Drinking Water Quality Standard (ECR '2023 – Bangladesh)	Unit
pH	7.3	6.5 - 8.5	-
Turbidity	1.1	5.0	NTU
Hardness	64	500	mg/L
Iron	0.51	1.0	mg/L
Manganese	0.2	0.4	mg/L
Arsenic	0.008	0.05	mg/L
Chloride	<60	250*	mg/L
TC	0	0	#/100mL
FC	0	0	#/100mL

Report Prepared & Checked by -

Md. Ibrahim Khalil
Sr. Chemist

Md. Ahasan Habib, PhD
Director-Research, Monitoring & Evaluation and Env.& WQ Management

Drink Safe Water Save Life

NGO FORUM FOR PUBLIC HEALTH

4/6, Block-E, Lalmatia
Dhaka-1207
Tel: 41022234, 41022235
Email: wqtl@ngof.org
www.ngof.org

Water Quality Testing Laboratory

Drink Safe Water Save Life

Chemical/Bacteriological/Physical Analysis of Water Samples

WQTL Code: D-428

Ref.: **WQTL/209 - 426/26** Date: **14-Oct-26** Sample Code: D428-4/5

Date of Sample Receiving: **6-Oct-26**

Client Name: **Roads and Highways Department (RHD), Chattogram Road Circle, Chattogram.**

Sample(s) Sent By: **Infrastructure Department and Management Services (IDMS)**

Project Name: **Widening of Baraiyerhat-Heako-Ramgarh Road Project (LOC-III)**

General Information of Samples:

Technology/Sample Source: **Ground Water (Tubewell)**

Tested parameters: **pH, Turbidity, Hardness, Iron, Manganese, Arsenic, TC & FC**

Address: **Village-Heyako, Ward No-02, Union-Datmara, Upazila: Mirsharai, District: Chattogram**

TEST RESULTS

Name of Parameters	Concentration Present	Drinking Water Quality Standard (ECR '2023 – Bangladesh)	Unit
pH	7.4	6.5 - 8.5	-
Turbidity	<1	5.0	NTU
Hardness	70	500	mg/L
Iron	<0.05	1.0	mg/L
Manganese	0.25	0.4	mg/L
Arsenic	0.009	0.05	mg/L
Chloride	<60	250*	mg/L
TC	0	0	#/100mL
FC	0	0	#/100mL

Report Prepared & Checked by -

Md. Ibrahim Khalil
Sr. Chemist

Md. Ahasan Habib, PhD
Director-Research, Monitoring & Evaluation and Env.& WQ Management

Drink Safe Water Save Life

NGO FORUM FOR PUBLIC HEALTH

4/6, Block-E, Lalmatia
Dhaka-1207
Tel: 41022234, 41022235
Email: wqtl@ngof.org
www.ngof.org

Water Quality Testing Laboratory

Drink Safe Water Save Life

Chemical/Bacteriological/Physical Analysis of Water Samples

WQTL Code: D-428

Ref.: **WQTL/209 - 426/26** Date: **14-Oct-26** Sample Code: D428-5/5

Date of Sample Receiving: **6-Oct-26**

Client Name: **Roads and Highways Department (RHD), Chattogram Road Circle, Chattogram.**

Sample(s) Sent By: **Infrastructure Department and Management Services (IDMS)**

Project Name: **Widening of Baraiyerhat-Heako-Ramgarh Road Project (LOC-III)**

General Information of Samples:

Technology/Sample Source: **Ground Water (Tubewell)**

Tested parameters: **pH, Turbidity, Hardness, Iron, Manganese, Arsenic, TC & FC**

Address: **Village-Sonaipul, Ward No-08, Municipality: Ramgarh, Upazila: Ramgarh, District: Khagrachhari.**

TEST RESULTS

Name of Parameters	Concentration Present	Drinking Water Quality Standard (ECR '2023 – Bangladesh)	Unit
pH	7.3	6.5 - 8.5	-
Turbidity	<1	5.0	NTU
Hardness	60.2	500	mg/L
Iron	<0.05	1.0	mg/L
Manganese	0.1	0.4	mg/L
Arsenic	0.004	0.05	mg/L
Chloride	<60	250*	mg/L
TC	0	0	#/100mL
FC	0	0	#/100mL

Report Prepared & Checked by -

Md. Ibrahim Khalil
Sr. Chemist

Md. Ahasan Habib, PhD
Director-Research, Monitoring & Evaluation and Env.& WQ Management

Drink Safe Water Save Life

NGO FORUM FOR PUBLIC HEALTH

Annex-9: Pictures of Ground Water Sample Collection Points

Ongoing Construction Stage



Karerhat, Ward-02, Union: Karerhat, Mirsharai, Chattogram



Heyako, Ward-02, Union: Datmara, Fotikchori, Chattogram



Sonaipul, Ward-08, Ramgarh Paurashava, Ramgarh, Khagrachhari

Annex-10: NoC from Forest Department

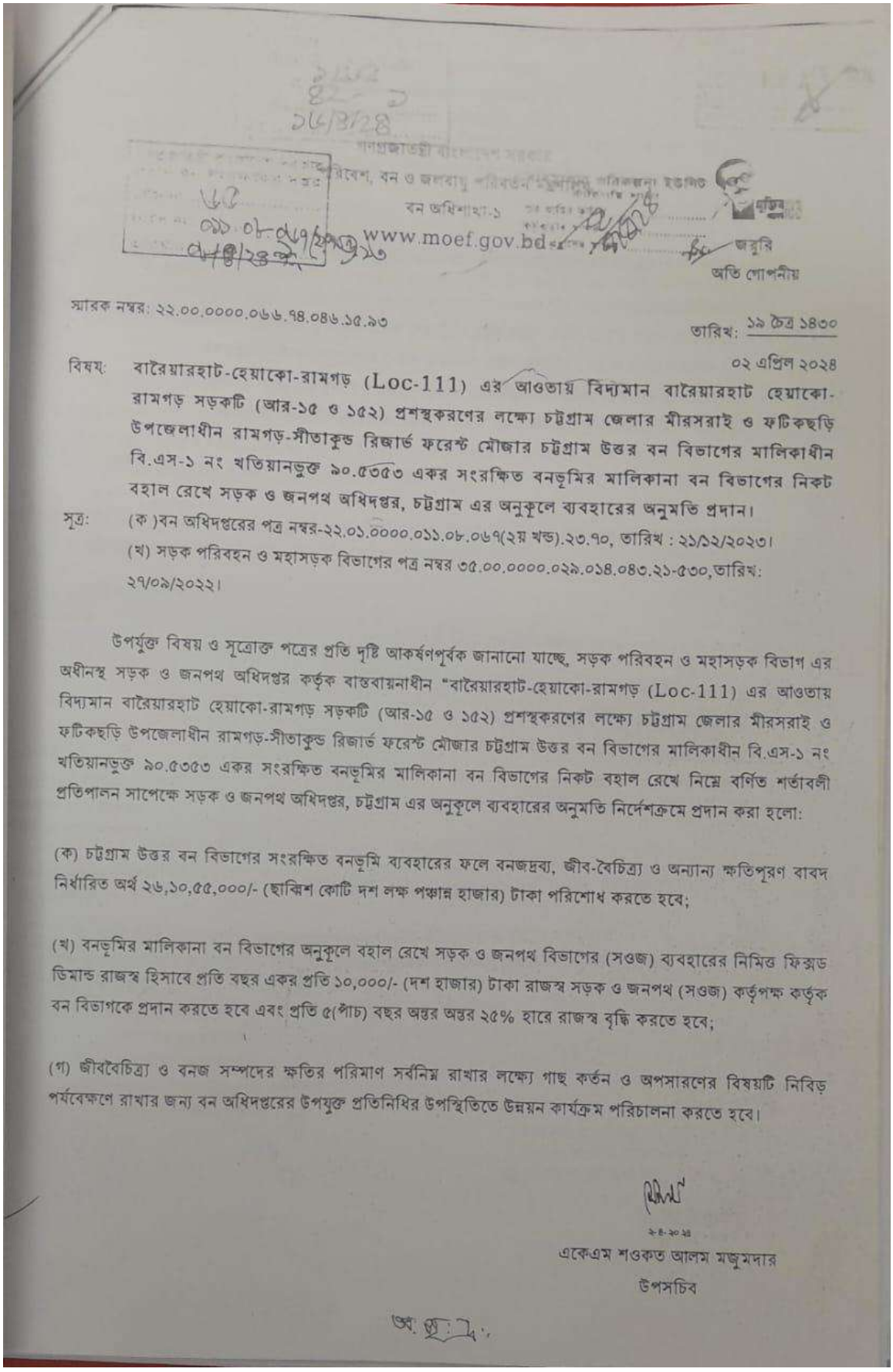

গণপ্রজাতন্ত্রী বাংলাদেশ সরকার
পরিবেশ, বন ও জলবায়ু পরিবর্তন মন্ত্রণালয়
বন অধিশাখা-১
www.moef.gov.bd

জরুরি
অতি গোপনীয়

স্মারক নম্বর: ২২.০০.০০০০.০৬৬.৭৪.০৪৬.১৫.৯৩

তারিখ: ১৯ চৈত্র ১৪৩০
০২ এপ্রিল ২০২৪

বিষয়: বারৈয়ারহাট-হেয়াকো-রামগড় (Loc-111) এর আওতায় বিদ্যমান বারৈয়ারহাট হেয়াকো-রামগড় সড়কটি (আর-১৫ ও ১৫২) প্রশস্থকরণের লক্ষ্যে চট্টগ্রাম জেলার মীরসরাই ও ফটিকছড়ি উপজেলাধীন রামগড়-সীতাকুন্ড রিজার্ভ ফরেস্ট মৌজার চট্টগ্রাম উত্তর বন বিভাগের মালিকাধীন বি.এস-১ নং খতিয়ানভুক্ত ৯০.৫৩৫৩ একর সংরক্ষিত বনভূমির মালিকানা বন বিভাগের নিকট বহাল রেখে সড়ক ও জনপথ অধিদপ্তর, চট্টগ্রাম এর অনুকূলে ব্যবহারের অনুমতি প্রদান।

সূত্র: (ক)বন অধিদপ্তরের পত্র নম্বর-২২.০১.০০০০.০১১.০৮.০৬৭(২য় খন্ড).২৩.৭০, তারিখ : ২১/১২/২০২৩।
(খ) সড়ক পরিবহন ও মহাসড়ক বিভাগের পত্র নম্বর ৩৫.০০.০০০০.০২৯.০১৪.০৪৩.২১-৫৩০,তারিখ: ২৭/০৯/২০২২।

উপর্যুক্ত বিষয় ও সূত্রোক্ত পত্রের প্রতি দৃষ্টি আকর্ষণপূর্বক জানানো যাচ্ছে, সড়ক পরিবহন ও মহাসড়ক বিভাগ এর অধীনস্থ সড়ক ও জনপথ অধিদপ্তর কর্তৃক বাস্তবায়নাধীন "বারৈয়ারহাট-হেয়াকো-রামগড় (Loc-111) এর আওতায় বিদ্যমান বারৈয়ারহাট হেয়াকো-রামগড় সড়কটি (আর-১৫ ও ১৫২) প্রশস্থকরণের লক্ষ্যে চট্টগ্রাম জেলার মীরসরাই ও ফটিকছড়ি উপজেলাধীন রামগড়-সীতাকুন্ড রিজার্ভ ফরেস্ট মৌজার চট্টগ্রাম উত্তর বন বিভাগের মালিকাধীন বি.এস-১ নং খতিয়ানভুক্ত ৯০.৫৩৫৩ একর সংরক্ষিত বনভূমির মালিকানা বন বিভাগের নিকট বহাল রেখে নিম্নে বর্ণিত শর্তাবলী প্রতিপালন সাপেক্ষে সড়ক ও জনপথ অধিদপ্তর, চট্টগ্রাম এর অনুকূলে ব্যবহারের অনুমতি নির্দেশক্রমে প্রদান করা হলো:

(ক) চট্টগ্রাম উত্তর বন বিভাগের সংরক্ষিত বনভূমি ব্যবহারের ফলে বনজদ্রব্য, জীব-বৈচিত্র্য ও অন্যান্য ক্ষতিপূরণ বাবদ নির্ধারিত অর্থ ২৬,১০,৫৫,০০০/- (ছাব্বিশ কোটি দশ লক্ষ পঞ্চান্ন হাজার) টাকা পরিশোধ করতে হবে;

(খ) বনভূমির মালিকানা বন বিভাগের অনুকূলে বহাল রেখে সড়ক ও জনপথ বিভাগের (সওজ) ব্যবহারের নিমিত্ত ফিক্সড ডিমান্ড রাজস্ব হিসাবে প্রতি বছর একর প্রতি ১০,০০০/- (দশ হাজার) টাকা রাজস্ব সড়ক ও জনপথ (সওজ) কর্তৃপক্ষ কর্তৃক বন বিভাগকে প্রদান করতে হবে এবং প্রতি ৫(পাঁচ) বছর অন্তর অন্তর ২৫% হারে রাজস্ব বৃদ্ধি করতে হবে;

(গ) জীববৈচিত্র্য ও বনজ সম্পদের ক্ষতির পরিমাণ সর্বনিম্ন রাখার লক্ষ্যে গাছ কর্তন ও অপসারণের বিষয়টি নিবিড় পর্যবেক্ষণে রাখার জন্য বন অধিদপ্তরের উপযুক্ত প্রতিনিধির উপস্থিতিতে উন্নয়ন কার্যক্রম পরিচালনা করতে হবে।

২-৪-২০২৪
একেএম শওকত আলম মজুমদার
উপসচিব

Annex-11: NoC from Union Parishad

বিসমিল্লাহির রাহমানির রাহিম

১নং বাগান বাজার ইউনিয়ন পরিষদ

NO. 1 BAGAN BAZAR UNION PARISHAD

ডাকঘর : চিকনছড়া, পোস্ট কোড : ৪৪৪০, থানা : ভূজপুর, উপজেলা : ফটিকছড়ি, জেলা : চট্টগ্রাম।
Post : Chikanchhara, Post Code : 4440, P/S : Bhujpur, Upazilla : Fatikchhari, Dist : Chattogram
e-mail : baganbazar.up@gmail.com

চেয়ারম্যান : মোঃ শাহাদাত হোসেন সাজু, মোবাইল : ০১৬২৫ ৫৪৪৩৮৫ Chairman : Md. Shahadat Hossen Saju, Mobile : 01625 544385

তারিখ : ২৭ ০৭ ২০২৬

স্মারক নং-বা: বা: ২৩.৮৮-০৪-০৯১ (২০২৩) তারিখঃ

অবস্থানগত/পরিবেশগত ছাড়পত্রের জন্য স্থানীয় কর্তৃপক্ষ কর্তৃক প্রদেয় অনাপত্তি পত্র

১। প্রকল্পের নাম : Widening of Baraiyerhat-Heako-Ramgarh Road Project (LOC-III)
২। আবেদনকারীর নাম : মোহাম্মদ জাহেদ হোসাইন।
৩। আবেদনকারীর ঠিকানা : চট্টগ্রাম রোড সার্কেল, চট্টগ্রাম।
৪। প্রকল্পের অবস্থানগত ঠিকানা : চট্টগ্রাম জেলার ফটিকছরি উপজেলার বাগান বাজার ইউনিয়ন।
৫। প্রকল্পের তফসিল :

ইউনিয়ন	উপজেলা/থানা	জেলা
বাগান বাজার	ফটিকছরি	চট্টগ্রাম

শর্তাবলী ঃ

১। প্রকল্প স্থাপনা ও পরিচালনার ক্ষেত্রে পরিবেশ সংরক্ষণ আইন ও বিধি যথাযথভাবে অনুসরণ করতে হবে।
২। পরিবেশ অধিদপ্তর হতে বিধি দ্বারা নির্ধারিত পদ্ধতিতে ছাড় পত্র গ্রহণ করতে হবে।
৩। কর্মরত শ্রমিকদের পেশাগত স্বাস্থ্য ও নিরাপত্তা নিশ্চিত করতে হবে।
৪। উর্পযুক্ত অগ্নিনির্বাপক ব্যবস্থা রাখতে হবে এবং অগ্নিকান্ড কিনবা অন্য কোন দূর্ঘটনার সময় জরুরি নির্গমন ব্যবস্থা থাকতে হবে।
৫। বায়ু ও শব্দ দূষণ করা যাবে না।
৬। প্রকল্পে সৃষ্ট তরল বর্জ্য অপরিশোধিত অবস্থায় বাইরে নির্গমন করা যাবে না।

উল্লেখিত যে কোনশর্ত লঙ্ঘন করলে যথোপযুক্ত কর্তৃপক্ষ কর্তৃক প্রকল্পের বিরুদ্ধে আইনানুগত ব্যবস্থা নেওয়া যাবে।

তারিখ ঃ

২৭/০৭/২০২৬

স্থানীয় কর্তৃপক্ষের স্বাক্ষর ও সীলঃ
মোঃ শাহাদাত হোসেন সাজু
চেয়ারম্যান
১নং বাগান বাজার ইউনিয়ন পরিষদ
ভূজপুর, ফটিকছড়ি, চট্টগ্রাম।

বিস্‌মিল্লাহির রাহমানির রাহিম

১নং বাগান বাজার ইউনিয়ন পরিষদ

NO. 1 BAGAN BAZAR UNION PARISHAD

ডাকঘর : চিকনছড়া, পোস্ট কোড : ৪৪৪০, থানা : ভূজপুর, উপজেলা : ফটিকছড়ি, জেলা : চট্টগ্রাম।
Post : Chikanchhara, Post Code : 4440, P/S : Bhujpur, Upazilla : Fatikchhari, Dist : Chattogram
e-mail : baganbazar.up@gmail.com
চেয়ারম্যান : মোঃ শাহাদাত হোসেন সাজু, মোবাইল : ০১৬২৫ ৫৪৪৩৮৫ Chairman : Md. Shahadat Hossen Saju, Mobile : 01625 544385

তারিখ : 27/07/2026

স্মারক নং-বা: বা: ইউ.পি-৩৪-০৯১ (২০২৩) তারিখঃ

অবস্থানগত/পরিবেশগত ছাড়পত্রের জন্য স্থানীয় কর্তৃপক্ষ কর্তৃক প্রদেয় অনাপত্তি পত্র

১। প্রকল্পের নাম : Widening of Baraiyerhat-Heako-Ramgarh Road Project (LOC-III)
২। আবেদনকারীর নাম : মোহাম্মদ জাহেদ হোসাইন।
৩। আবেদনকারীর ঠিকানা : চট্টগ্রাম রোড সার্কেল, চট্টগ্রাম।
৪। প্রকল্পের অবস্থানগত ঠিকানা : চট্টগ্রাম জেলার ফটিকছরি উপজেলার বাগান বাজার ইউনিয়ন।
৫। প্রকল্পের তফসিল :

ইউনিয়ন	উপজেলা/থানা	জেলা
বাগান বাজার	ফটিকছরি	চট্টগ্রাম

শর্তাবলী :

১। প্রকল্প স্থাপনা ও পরিচালনার ক্ষেত্রে পরিবেশ সংরক্ষণ আইন ও বিধি যথাযথভাবে অনুসরণ করতে হবে।
২। পরিবেশ অধিদপ্তর হতে বিধি দ্বারা নির্ধারিত পদ্ধতিতে ছাড় পত্র গ্রহণ করতে হবে।
৩। কর্মরত শ্রমিকদের পেশাগত স্বাস্থ্য ও নিরাপত্তা নিশ্চিত করতে হবে।
৪। উর্পযুক্ত অগ্নিনির্বাপক ব্যবস্থা রাখতে হবে এবং অগ্নিকান্ড কিনবা অন্য কোন দূর্ঘটনার সময় জরুরি নির্গমন ব্যবস্থা থাকতে হবে।
৫। বায়ু ও শব্দ দূষণ করা যাবে না।
৬। প্রকল্পে সৃষ্ট তরল বর্জ্য অপরিশোধিত অবস্থায় বাইরে নির্গমন করা যাবে না।

উল্লেখিত যে কোনশর্ত লঙ্ঘন করলে যথোপযুক্ত কর্তৃপক্ষ কর্তৃক প্রকল্পের বিরুদ্ধে আইনানুগত ব্যবস্থা নেওয়া যাবে।

তারিখ :

27/07/2026 ইং
স্থানীয় কর্তৃপক্ষের স্বাক্ষর ও সীলঃ
মোঃ শাহাদাত হোসেন সাজু
চেয়ারম্যান
১নং বাগান বাজার ইউনিয়ন পরিষদ
ভূজপুর, ফটিকছড়ি, চট্টগ্রাম।

Annex-12: Assessment Report of Hill Cutting from DoE

গণপ্রজাতন্ত্রী বাংলাদেশ সরকার
পরিবেশ অধিদপ্তর
চট্টগ্রাম জেলা কার্যালয়
পরিবেশ ভবন
জাকির হোসেন সড়ক, খুলশী, চট্টগ্রাম-৪২০২।
www.doe.gov.bd

স্মারক নং-২২.০২.১৫০০.২০৭.৭২.১৫০.২৪- ৮০৯৭

তারিখঃ ১৮ আশ্বিন, ১৪৩৩ বঙ্গাব্দ / ২৮ সেপ্টেম্বর, ২০২৬ খ্রিঃ

বিষয়ঃ বাংলাদেশ সরকার এবং ৩য় ভারতীয়-নমনীয় ঋণ (LOC-III) এর যৌথ অর্থায়নে সড়ক ও জনপথ অধিদপ্তর কর্তৃক বাস্তবায়নাধীন "বারৈয়ারহাট-হেঁয়াকো-রামগড় সড়ক প্রশস্তকরণ" শীর্ষক প্রকল্পের সড়ক প্রশস্তকরণের লক্ষ্যে সড়ক পার্শ্বস্থ টিলা/পাহাড় হতে মাটি কাটার পূর্বানুমোদন সংক্রান্ত সরেজমিন পরিদর্শন প্রতিবেদন ও মতামত প্রেরণ।

সূত্র: ক) পরিবেশ অধিদপ্তর, সদর দপ্তরের শাখার স্মারক নং ২২.০২.০০০০.০০০.০১৮.৫২.০০০২.২৫.১৮৭, তারিখ: ২২/০৯/২০২৬ খ্রি.।
খ) পরিবেশ, বন ও জলবায়ু পরিবর্তন মন্ত্রণালয়ের পত্র নং ২২.০০.০০০০.০০০.০৭৪.৩১.০০১০.২০.৩৮৬, তারিখ: ১৫/০৯/২০২৬ খ্রি.।

উপর্যুক্ত বিষয় ও সূত্রের পরিপ্রেক্ষিতে বাংলাদেশ সরকার এবং ৩য় ভারতীয়-নমনীয় ঋণ (LOC-III) এর যৌথ অর্থায়নে সড়ক ও জনপথ অধিদপ্তর কর্তৃক বাস্তবায়নাধীন "বারৈয়ারহাট-হেঁয়াকো-রামগড় সড়ক প্রশস্তকরণ" শীর্ষক প্রকল্পের অনুকূলে প্রস্তাবিত ১৬টি অংশ হতে সর্বমোট ১৮,০৯৫ ঘনফুট (৫১২.৪৬ ঘনমিটার) মাটি কাটার পূর্বানুমোদন প্রদান এবং প্রকল্পের অনুকূলে অবস্থানগত ছাড়পত্র প্রদানের লক্ষ্যে এবং ইআইএ-এর ToR অনুমোদনের লক্ষ্যে প্রতিবেদনটি পরবর্তী প্রয়োজনীয় ব্যবস্থা গ্রহণের জন্য মহোদয়ের সদয় অবগতি ও পরবর্তী প্রয়োজনীয় কার্যার্থে এসাথে প্রেরণ করা হলো।

সংযুক্তিঃ বর্ণনা মোতাবেক ০৪ পাতা

২৮/০৯/২০২৬
(মোঃ মোজাহিদুর রহমান)
উপপরিচালক
ফোন নংঃ ০২-৩৩৩৩৭৯২০৯

পরিচালক (পরিবেশগত ছাড়পত্র)
পরিবেশ অধিদপ্তর
সদর দপ্তর, আগারগাঁও
শেরে বাংলা নগর, ঢাকা।

অনুলিপিঃ সদয় অবগতির জন্য (জ্যেষ্ঠতার ক্রমানুসারে নয়)-

১। পরিচালক, পরিবেশ অধিদপ্তর, চট্টগ্রাম অঞ্চল কার্যালয়, চট্টগ্রাম।
২। প্রকল্প পরিচালক ও তত্ত্বাবধায়ক প্রকৌশলী (চ:দ:), সওজ, চট্টগ্রাম সড়ক সার্কেল, রহমতগঞ্জ, চট্টগ্রাম।
৩। সহকারী পরিচালক, মহাপরিচালক মহোদয়ের শাখা, পরিবেশ অধিদপ্তর, সদর দপ্তর, আগারগাঁও, শেরে বাংলা নগর, ঢাকা।
৪। অফিস কপি।

পরিবেশ অধিদপ্তর ★ চট্টগ্রাম ★ পরিবেশগত ছাড়পত্র শাখা
চিঠি গ্রহিত
29.09.26

বরাবর
উপপরিচালক
পরিবেশ অধিদপ্তর
চট্টগ্রাম জেলা কার্যালয়, চট্টগ্রাম।

Seen 28/09/2026

বিষয়: বাংলাদেশ সরকার এবং ৩য় ভারতীয়-নমনীয় ঋণ (LOC-III) এর যৌথ অর্থায়নে সড়ক ও জনপথ অধিদপ্তর কর্তৃক বাস্তবায়নাধীন "বারৈয়ারহাট-হেঁয়াকো-রামগড় সড়ক প্রশস্তকরণ" শীর্ষক প্রকল্পের সড়ক প্রশস্তকরণের লক্ষ্যে সড়ক পার্শ্বস্থ টিলা/পাহাড় হতে মাটি কাটার পূর্বানুমোদন সংক্রান্ত সরেজমিন পরিদর্শন প্রতিবেদন ও মতামত প্রেরণ।

সূত্র: ক) পরিবেশ অধিদপ্তর, সদর দপ্তরের শাখার স্মারক নং ২২.০২.০০০০.০০০.০১৮.৫২.০০০২.২৫.১৮৭, তারিখ: ২২/০৯/২০২৬ খ্রি.।
খ) পরিবেশ, বন ও জলবায়ু পরিবর্তন মন্ত্রণালয়ের পত্র নং ২২.০০.০০০০.০০০.০৭৪.৩১.০০১০.২০.৩৮৬, তারিখ: ১৫/০৯/২০২৬ খ্রি.।

উপর্যুক্ত বিষয় ও সূত্রের প্রেক্ষিতে জানানো যাচ্ছে যে, গত ২৭/০৯/২০২৬ খ্রি. তারিখে নিম্নস্বাক্ষরকারী কর্তৃক প্রকল্প এলাকার বিভিন্ন অংশ সরেজমিন পরিদর্শন করা হয়। পরিদর্শনে প্রাপ্ত তথ্য এবং সংশ্লিষ্ট নথি পর্যালোচনার আলোকে বিস্তারিত বিবরণ নিম্নে উপস্থাপন করা হলো:

প্রকল্প সংক্রান্ত তথ্যাবলী:

প্রকল্পের নাম	বারৈয়ারহাট-হেঁয়াকো-রামগড় সড়ক প্রশস্তকরণ (আর-১৫১ ও ১৫২) [Widening of Baraiyerhat-Heanko-Ramgarh Road Project (LOC-III)]
বাস্তবায়নকারী সংস্থা	সড়ক ও জনপথ অধিদপ্তর, চট্টগ্রাম সড়ক সার্কেল, চট্টগ্রাম
অর্থায়ন ও প্রাক্কলিত ব্যয়	বাংলাদেশ সরকার এবং ৩য় ভারতীয়-নমনীয় ঋণ (LOC-III); মোট ১,২২,৬৩১.৬৩ লক্ষ টাকা (জিওবি ৬৩,২২৪.৮০ লক্ষ ও LOC ৫৯,৪০৬.৮৩ লক্ষ টাকা)
মেয়াদকাল	জুলাই ২০২০ হতে ডিসেম্বর ২০২৬ (একনেক কর্তৃক অনুমোদন: ১৮/০৮/২০২০ খ্রি.)
দৈর্ঘ্য ও প্রশস্ততা	মোট ৩৮.০ কিলোমিটার (৩৪.৭৫০ কি.মি. চট্টগ্রাম জেলার মীরসরাই ও ফটিকছড়ি উপজেলায় এবং ৩.২৫ কি.মি. খাগড়াছড়ি পার্বত্য জেলার রামগড় উপজেলায়); বিদ্যমান ৫.৫ মিটার প্রশস্ত সড়ক ১১.৩ মিটারে উন্নীতকরণ
ভৌগোলিক অবস্থান	বারৈয়ারহাট অংশ: 22°53'38.0"N, 91°32'05.1"E; রামগড় অংশ: 22°59'58.0"N, 91°44'06.4"E
প্রকল্পের শ্রেণি	লাল (ক্রমিক নং ৩৮ ও ৩৯)
প্রকল্প পরিচালক	জনাব মোহাম্মদ জাহেদ হোসেন, তত্ত্বাবধায়ক প্রকৌশলী (চ. দা.), সওজ, চট্টগ্রাম সড়ক সার্কেল, চট্টগ্রাম
ঠিকাদারি প্রতিষ্ঠান	অশোকা বিল্ডকন লিমিটেড, কাঞ্চন, হাউজ নং-২৫, কোতোয়ালী, চট্টগ্রাম
বর্তমান অগ্রগতি	প্রায় ৫৩% (প্রকল্প কর্তৃপক্ষের তথ্য অনুযায়ী)

সড়কটির ৩৮.০০ কিলোমিটারের মধ্যে প্রথম প্রায় ৮.০০ কিলোমিটার সওজ-এর পূর্ব অধিগ্রহণকৃত এবং পরবর্তী ১৬.০০ কিলোমিটার রামগড়-সীতাকুণ্ড রিজার্ভ ফরেস্ট এলাকায় অবস্থিত। পরিবেশ, বন ও জলবায়ু পরিবর্তন মন্ত্রণালয় ০২/০৪/২০২৪ খ্রি. তারিখে ৯০.৫৩৫৩ একর সংরক্ষিত বনভূমি সওজ-এর অনুকূলে ব্যবহারের অনুমতি প্রদান করে এবং এর ক্ষতিপূরণ বাবদ ২৬,১০,৫৫,০০০/- টাকা বন বিভাগের অনুকূলে পরিশোধ করা হয়েছে।

প্রকল্প কর্তৃপক্ষের প্রদত্ত তথ্যমতে ৩১/১২/২০২৬ খ্রি. তারিখের মধ্যে প্রকল্প বাস্তবায়িত না হলে খাগড়াছড়ি জেলার সাথে সড়ক যোগাযোগ ঝুঁকিপূর্ণ হতে পারে বিধায় প্রকল্পের অন্তর্ভুক্ত সেতু ও কালভার্টসহ অবশিষ্ট কাজ সম্পন্ন করার জন্য সড়ক পার্শ্বস্থ টিলা/পাহাড় শ্রেণির ভূমি হতে ১৬টি অংশে সর্বমোট ১৮,০৯৫ ঘনফুট (৫১২.৪৬ ঘনমিটার) মাটি কাটার পূর্বানুমোদন চাওয়া হয়েছে।

মৌজাভিত্তিক পাহাড় কর্তনের সারসংক্ষেপ:

মৌজা / দাগ	প্রস্তাবিত পরিমাণ (ঘনফুট)	মোট প্রস্তাবের শতাংশ
গেরামারা (CS-১৬৬, ১৬১, ২৯৯৮, ১৭১) — টিলা	১,২৪০	৬.৮৫%
গেরামারা (রামগড়-সীতাকুণ্ড রিজার্ভ ফরেস্ট) — পাহাড়	৪,১৭২	২৩.০৬%
দাতমারা (CS-৩৭৬, ৮টি অংশ) — পাহাড়	১১,৭৬৩	৬৫.০১%
দাতমারা ও জঙ্গল দাতমারা (CS-৫০১) — পাহাড়/টিলা	৯২০	৫.০৮%
সর্বমোট	১৮,০৯৫	১০০%

সরেজমিন পরিদর্শনের বিবরণ

পরিদর্শনকালে প্রকল্প কর্তৃপক্ষের প্রতিনিধি সেগুন প্রসাদ বড়ুয়া, সাব ডিবিশনাল ইঞ্জিনিয়ার, সওজ, চট্টগ্রাম, (০১৭৩০-৭৮২৬৮১) এর উপস্থিতিতে নিম্নস্বাক্ষরকারী কর্তৃক প্রকল্প কর্তৃপক্ষের উল্লিখিত গেরামারা, দাতমারা ও জঙ্গল দাতমারা মৌজার প্রস্তাবিত অংশসমূহসহ প্রকল্পের সড়ক প্রশস্তকরণ এলাকার বিভিন্ন অংশ সরেজমিন পরিদর্শন করা হয়। পরিদর্শনকালে প্রকল্প এলাকায় নতুন করে কোনো পাহাড়/টিলা কর্তন বা মোচন করা হয়নি মর্মে প্রতীয়মান হয়েছে। ইতঃপূর্বে গত ০৪/১১/২০২৫ খ্রি. তারিখের পুনঃপরিদর্শনে পরিমাপকৃত ১৭টি কর্তিত অংশের বাইরে নতুন কোনো পাহাড়/টিলা কর্তন পরিলক্ষিত হয়নি।

নথি পর্যালোচনা

নথি পর্যালোচনায় দেখা যায়, নির্বাহী প্রকৌশলী, সওজ, চট্টগ্রাম সড়ক বিভাগ ২৮/০৬/২০২১ খ্রি. তারিখে পরিবেশগত ছাড়পত্রের জন্য আবেদন করেন। পরিবেশ অধিদপ্তর, সদর দপ্তরের ২২.০২.০০০০.০১৮.৭২.০৩৯.২২.৬২ নং স্মারকে ২৮/০৪/২০২২ খ্রি. তারিখে ইআইএ-এর কার্যপরিধি (ToR) অনুমোদিত হয়। পরবর্তীতে পরিবেশ সংরক্ষণ বিধিমালা, ২০২৩ প্রণয়নের প্রেক্ষিতে প্রকল্প কর্তৃপক্ষ ১৮/১১/২০২৪ খ্রি. তারিখে পুনরায় ToR অনুমোদনের জন্য আবেদন করেন এবং ০৩/১২/২০২৪ ও ২৬/০২/২০২৫ খ্রি. তারিখে অবস্থানগত ছাড়পত্রের জন্য আবেদন (অনলাইন নং ১৬৩৭৮৭) দাখিল করেন।

অবস্থানগত ছাড়পত্রের আবেদনের প্রেক্ষিতে ১৯/১২/২০২৪ খ্রি. তারিখে নিম্নস্বাক্ষরকারী কর্তৃক প্রকল্প এলাকা পরিদর্শন করে ৯টি পয়েন্টে আনুমানিক ১০,১৪,৬০০ ঘনফুট পাহাড়/টিলা কর্তন/মোচন করা হয়েছে মর্মে প্রতীয়মান হয়। ততঃপ্রেক্ষিতে পরিবেশ অধিদপ্তর, চট্টগ্রাম অঞ্চল কার্যালয় এনফোর্সমেন্ট মামলা নং৫৪/২৫ (চট্টগ্রাম) রুজু করে এবং ২৭/০৭/২০২৫ খ্রি. তারিখের ৮১০ নং স্মারকে অশোকা বিল্ডকন লিমিটেডকে শুনানিতে হাজির হওয়ার নোটিশ প্রদান করে। ২৩/০৯/২০২৫ খ্রি. তারিখের শুনানিতে অশোকা বিল্ডকন লিমিটেডের প্রকল্প ব্যবস্থাপক জনাব সন্দীপ দে ও উপ-প্রকল্প ব্যবস্থাপক জনাব রবিউল আলম উপস্থিত হয়ে জানান যে, প্রতিষ্ঠানটি কর্তৃক কাজ শুরুর পূর্বেই পাহাড়ের কিছু অংশ কর্তন করা হয়েছিল এবং কর্তনকৃত পাহাড়ের পরিমাণ সঠিক নয়। শুনানি-অন্তে উপপরিচালক, চট্টগ্রাম জেলা কার্যালয়কে পাহাড় কর্তনের স্থান পুনঃপরিদর্শনপূর্বক চিত্রসহ বিস্তারিত প্রতিবেদন দাখিলের নির্দেশ প্রদান করা হয়।

উক্ত নির্দেশনার আলোকে উপপরিচালক কর্তৃক ০৪/১১/২০২৫ খ্রি. তারিখে সওজ, ঠিকাদারি প্রতিষ্ঠান ও সার্ভেয়ারের উপস্থিতিতে প্রকল্প এলাকা পুনঃপরিদর্শন করা হয়। পরিমাপক ফিতা দ্বারা পরিমাপ করে গেরামারা, দাতমারা ও জঙ্গল দাতমারা মৌজার ১৭টি অংশে সর্বমোট ১,৩২,৫৭০ ঘনফুট (৩৪.৯২ শতক) পাহাড়/টিলা কর্তনের প্রমাণ পাওয়া যায়। পূর্ববর্তী প্রতিবেদনের সাথে পরিমাণের পার্থক্য সম্পর্কে ব্যাখ্যা দেওয়া হয় যে, প্রাথমিক প্রতিবেদনে দৃশ্যমান সকল উঁচু অংশ অন্তর্ভুক্ত করা হয়েছিল, আর পুনঃপরিদর্শনে কেবল সরকারি রেকর্ডে পাহাড়/টিলা শ্রেণির ভূমির কর্তিত অংশ বিবেচনা করা হয়েছে।

পরিবেশ অধিদপ্তর, চট্টগ্রাম অঞ্চল মহোদয় কর্তৃক অভিযুক্তদের সার্বিক অবস্থা বিবেচনায় ১,৩২,৫৭,০০০/- (এক কোটি বত্রিশ লক্ষ সাতান্ন হাজার) টাকা ক্ষতিপূরণ ধার্য করা হয় এবং এনফোর্সমেন্ট মামলা নং৫৪/২৫ (চট্টগ্রাম)-২০৯২ নং আদেশে ০৭ (সাত) কার্যদিবসের মধ্যে ই-চালানের মাধ্যমে তা জমা প্রদানের নির্দেশ প্রদান করা হয়।

উক্ত আদেশের বিরুদ্ধে অশোকা বিল্ডকন লিমিটেড বাংলাদেশ পরিবেশ সংরক্ষণ আইন, ১৯৯৫ (সংশোধিত ২০১০) এর ধারা ১৪ অনুযায়ী ০৪/০১/২০২৬ খ্রি. তারিখে সচিব, পরিবেশ, বন ও জলবায়ু পরিবর্তন মন্ত্রণালয় ও চেয়ারম্যান, আপিল কর্তৃপক্ষ বরাবর আপিল দায়ের করে এবং ০৬/০১/২০২৬ খ্রি. তারিখে পরিচালক, চট্টগ্রাম অঞ্চলকে বিষয়টি অবহিত করে।

আপিল নং ০১/২০২৬ এর ০৪/০৬/২০২৬ খ্রি. তারিখের শুনানির পর আপিল কর্তৃপক্ষ ২০/০৮/২০২৬ খ্রি. তারিখের আদেশপত্রে নিম্নরূপ সিদ্ধান্ত প্রদান করে:

(ক) প্রকল্পের প্রায় ৫৫% কাজ সম্পন্ন হওয়ায় এবং জনস্বার্থ বিবেচনায় ধার্যকৃত ক্ষতিপূরণ ১,৩২,৫৭,০০০/- টাকা হ্রাস করে ২৫% হিসেবে ৩৩,১৪,২৫০/- (তেত্রিশ লক্ষ চৌদ্দ হাজার দুইশত পঞ্চাশ) টাকা পুনঃনির্ধারণ করা হয়েছে;

(খ) আপিল দাখিলের সময় আপিলকারী কর্তৃক ২৫% অর্থ মহাপরিচালক, পরিবেশ অধিদপ্তর বরাবর জমা দেওয়ায় পুনঃনির্ধারিত ক্ষতিপূরণ পরিশোধিত মর্মে গণ্য করা হয়েছে;

(গ) পরিবেশগত ছাড়পত্র গ্রহণ করে প্রকল্পের পরবর্তী কার্যক্রম শুরু করার জন্য সওজকে জানিয়ে দেওয়ার নির্দেশনা প্রদান করা হয়েছে এবং উল্লেখ করা হয়েছে যে, জাতীয় স্বার্থে সড়ক উন্নয়ন কাজ বাস্তবায়নের ক্ষেত্রে বিদ্যমান আইন ও বিধিমালা অনুসরণ করে "প্রকল্প ছাড়পত্র" গ্রহণপূর্বক কাজ বাস্তবায়ন আবশ্যক;

পরিবেশ, বন ও জলবায়ু পরিবর্তন মন্ত্রণালয়ের বন অধিশাখা-১ এর ০২/০৪/২০২৪ খ্রি. তারিখের ২২.০০.০০০০.০৬৬.৭৪.০৪৬.১৫.৯৩ নং স্মারকে মীরসরাই ও ফটিকছড়ি উপজেলাধীন রামগড়-সীতাকুণ্ড রিজার্ভ ফরেস্ট মৌজার বি.এস.-১ নং খতিয়ানভুক্ত ৯০.৫৩৫৩ একর সংরক্ষিত বনভূমির মালিকানা বন বিভাগের নিকট বহাল রেখে সওজ-এর অনুকূলে ব্যবহারের অনুমতি প্রদান করা হয়েছে। অনুমতির শর্তানুযায়ী (ক) ক্ষতিপূরণ বাবদ ২৬,১০,৫৫,০০০/- টাকা পরিশোধ করা হয়েছে।

বর্তমান প্রস্তাবের পর্যালোচনা:

(ক) প্রস্তাবিত ১৮,০৯৫ ঘনফুট পূর্বে কর্তিত ১,৩২,৫৭০ ঘনফুটের প্রায় ১৩.৬৫%। প্রস্তাবিত সকল দাগ (CS-১৬৬, ১৬১, ২৯৯৮, ১৭১, রিজার্ভ ফরেস্ট, CS-৩৭৬ ও CS-৫০১) প্রাথমিক পরিদর্শন/পুনঃপরিদর্শনে উল্লিখিত দাগসমূহের অন্তর্ভুক্ত। এতে প্রতীয়মান হয় যে, প্রস্তাবিত কর্তন নতুন কোনো স্থানে নয়; বরং ইতঃপূর্বে কর্তিত অংশসমূহের অবশিষ্ট/সংলগ্ন অংশে সড়কের এলাইনমেন্ট অনুযায়ী প্রশস্ততা নিশ্চিতের জন্য প্রয়োজন।

(খ) এনফোর্সমেন্ট মামলা নং ৫৪/২৫ (চট্টগ্রাম) আপিল কর্তৃপক্ষের আদেশে চূড়ান্তভাবে নিষ্পত্তি হয়েছে এবং পুনঃনির্ধারিত ক্ষতিপূরণ পরিশোধিত মর্মে গণ্য হয়েছে।

মতামত

এমতাবস্থায়, বাংলাদেশ পরিবেশ সংরক্ষণ আইন, ১৯৯৫ (সংশোধিত ২০১০) এর ধারা ৬(খ) এর শর্তাংশ অনুযায়ী অপরিহার্য জাতীয় স্বার্থে "বারৈয়ারহাট-হেঁয়াকো-রামগড় সড়ক প্রশস্তকরণ" শীর্ষক প্রকল্পের অনুকূলে প্রস্তাবিত ১৬টি অংশ হতে সর্বমোট ১৮,০৯৫ ঘনফুট (৫১২.৪৬ ঘনমিটার) মাটি কাটার পূর্বানুমোদন প্রদান এবং প্রকল্পের অনুকূলে অবস্থানগত ছাড়পত্র প্রদানের লক্ষে এবং ইআইএ-এর ToR অনুমোদনের লক্ষ্যে প্রতিবেদনটি পরবর্তী প্রয়োজনীয় ব্যবস্থা গ্রহণের জন্য পরিবেশ অধিদপ্তর, সদর দপ্তরের ছাড়পত্র বিষয়ক কমিটিতে প্রেরণ করা যেতে পারে।

28.09.2026

(মোঃ আশরাফ উদ্দিন)
রিসার্চ অফিসার
পরিবেশ অধিদপ্তর
চট্টগ্রাম জেলা কার্যালয়, চট্টগ্রাম।

গণপ্রজাতন্ত্রী বাংলাদেশ সরকার
পরিবেশ, বন ও জলবায়ু পরিবর্তন মন্ত্রণালয়
পরিবেশ অধিদপ্তর
পরিবেশগত ছাড়পত্র শাখা,
www.doe.gov.bd

স্মারক নম্বর: ২২.০২.০০০০.০০০.০১৮.৫২.০০০২.২৫.১৮৭

তারিখ: ৭ আশ্বিন ১৪৩৩ / ২২ সেপ্টেম্বর ২০২৬

বিষয়: বাংলাদেশ সরকার এবং ৩য় ভারতীয়-নমনীয় ঋণ (LOC-III) এর যৌথ অর্থায়নে সড়ক ও জনপথ অধিদপ্তর কর্তৃক বাস্তবায়নাধীন "বায়েয়ারহাট-হেঁয়াকো-রামগড় সড়ক প্রশস্তকরণ" শীর্ষক প্রকল্পের সড়ক প্রশস্তকরণের লক্ষ্যে সড়ক পার্শ্বস্থ টিলা/পাহাড় হতে মাটি কাটার পূর্বানুমোদন সংক্রান্ত।

সূত্র: প্রশাসনিক মন্ত্রণালয় এর পত্র নম্বর: ২২.০০.০০০০.০০০.০৭৪.৩১.০০১০.২০.৩৮৬ তারিখ: ১৫ সেপ্টেম্বর ২০২৬ খ্রি

উপর্যুক্ত বিষয় ও সূত্রের পরিপ্রেক্ষিতে বাংলাদেশ সরকার এবং ৩য় ভারতীয়-নমনীয় ঋণ (LOC- III) এর যৌথ অর্থায়নে সড়ক ও জনপথ অধিদপ্তর কর্তৃক বাস্তবায়নাধীন "বায়েয়ারহাট-হেঁয়াকো-রামগড় সড়ক প্রশস্তকরণ" শীর্ষক প্রকল্পের সড়ক প্রশস্তকরণের লক্ষ্যে সড়ক পার্শ্বস্থ টিলা/পাহাড় হতে মাটি কাটার পূর্বানুমোদন সংক্রান্ত পত্র ও তদসংক্রান্ত কাগজপত্রাদি এতদসঙ্গে প্রেরণ করা হলো। বর্ণিত বিষয়ে সরেজমিন পরিদর্শনপূর্বক পরিদর্শন প্রতিবেদন ও সুস্পষ্ট মতামত প্রদানের জন্য অনুরোধ করা হলো।

সংযুক্তি: বর্ণনা মোতাবেক ১৪ (চৌদ্দ) পাতা।

সংযুক্তিসমূহঃ
(১) 22_00_0000_000_074_31_0010_20_386-2026-09-15-1789449763
(২) পত্র ও তৎসংযুক্ত কাগজপত্র

২২-০৯-২০২৬
মাসুদ ইকবাল মোঃ শামীম
পরিচালক
ফোন : ২২২২১৮৩৪২
ইমেইল : direc@doe.gov.bd

পরিচালক
পরিচালক এর কার্যালয়, পরিবেশ অধিদপ্তর আঞ্চলিক কার্যালয়, চট্টগ্রাম।

চলমান পাতা - ১/২

বাংলাদেশ পরিবেশ সংরক্ষণ আইন, ১৯৯৫ (১৯৯৫ সনের ১ নং আইন) এর ধারা ১৪ এবং পরিবেশ সংরক্ষণ বিধিমালা, ২০২৩ এর বিধি ২৯ এর
বিধান অনুযায়ী দায়েরকৃত আপিল আবেদনের শুনানি
আপিল নং-০১/২০২৬
তারিখ: ০৪/০১/২০২৬
ব্যক্তি/প্রতিষ্ঠানের নাম: অশোকা বিল্ডকন লিমিটেড; কাজল, হাউজ নং-২৫, কোতোয়ালী, চট্টগ্রাম।
বনাম
পরিচালক, পরিবেশ অধিদপ্তর, চট্টগ্রাম অঞ্চল কার্যালয়, চট্টগ্রাম।

আদেশপত্র

অদ্য ০৪/০১/২০২৬ তারিখ ধার্যকৃত শুনানির দ্বিতীয় দিনে উভয়পক্ষ হাজির।

উভয়পক্ষের বক্তব্য পর্যালোচনা করা হলো। অশোকা বিল্ডকন লিমিটেড; কাজল, হাউজ নং-২৫, কোতোয়ালী, চট্টগ্রাম নামক প্রতিষ্ঠানটি পরিবেশগত ছাড়পত্র ও ইআইএ (EIA) প্রতিবেদন অনুমোদন ব্যতিরেকে প্রকল্পের ভূমি উন্নয়ন ও সড়ক প্রশস্তকরণের কাজ শুরু করায় এবং সড়কের মোট ১৭টি অংশে ১,৩২,৫৭০ বর্গমিটার পাহাড়/টিলা শ্রেণির ভূমি কর্তন করায় বাংলাদেশ পরিবেশ সংরক্ষণ আইন, ১৯৯৫ (সংশোধিত ২০১০) এর ধারা ৬(খ) ও ধারা ১২ অনুযায়ী সড়ক ও জনপথ অধিদপ্তর, চট্টগ্রাম সার্কেল এর প্রকল্প পরিচালক ও তত্ত্বাবধায়ক প্রকৌশলী জনাব মোহাম্মদ জাহেদ হোসেন, এবং নির্বাহী প্রকৌশলী জনাব মোহাম্মদ মোসলেহউদ্দীন চৌধুরী ও অশোকা বিল্ডকন লিমিটেড-কে পরিবেশ অধিদপ্তর কর্তৃক অরিসামান্য দন্ড আরোপ করা হয়। বাংলাদেশ পরিবেশ সংরক্ষণ আইন, ১৯৯৫ (সংশোধিত-২০১০) এর ধারা ৭ এর আলোকে (Widening of Baraiyerhat Heanko-Ramgarh road Project (LOC III) প্রকল্প এলাকায় সরকারি অনুমোদন ব্যতীত পাহাড় কর্তনের মাধ্যমে পরিবেশ ও প্রতিবেশগত ক্ষতিসাধনের জন্য অতিপূরণ বাবদ ১,৩২,৫৭,০০০/-(এক কোটি বত্রিশ লক্ষ সাতাশ হাজার) টাকা ধার্য করা হয়। প্রকল্পের প্রায় ৫৫% কাজ শেষ হওয়ায় এবং জনস্বার্থ বিবেচনায় নিয়ে পরিবেশ অধিদপ্তর কর্তৃক ধার্যকৃত ক্ষতিপূরণ ১,৩২,৫৭,০০০/-(এক কোটি বত্রিশ লক্ষ সাতাশ হাজার) টাকা কিছুটা হ্রাস করে ক্ষতিপূরণ ২৫% হিসেবে অর্থাৎ ৩৩,১৪,২৫০/- (তেত্রিশ লক্ষ চৌদ্দ হাজার দুইশত পঞ্চাশ) টাকা পুনঃনির্ধারণ করা হলো। অত্র আপিল দায়িল করার সময় আপিলকারী কর্তৃক পুনঃনির্ধারিত ক্ষতিপূরণ ইতোমধ্যে পরিশোধ করা হয়েছে। যেহেতু ইতোমধ্যে ২৫% অর্থ মহাপরিচালক, পরিবেশ অধিদপ্তর বরাবর জমা দেয়া হয়েছে সেহেতু পরিবেশগত ছাড়পত্র গ্রহণ করে প্রকল্পের পরবর্তী কার্যক্রম শুরু করার জন্য সংশ্লিষ্টদের (সড়ক ও জনপথ অধিদপ্তর) জানিয়ে দেয়া হোক।

তবে, বনানমতে পাহাড়/টিলা কর্তন করে পরিবেশ এবং প্রতিবেশগত ক্ষতিসাধনের সাথে সরাসরি সংশ্লিষ্টতা না থাকায় সড়ক ও জনপথ বিভাগের তত্ত্বাবধায়ক প্রকৌশলী জনাব মোহাম্মদ জাহেদ হোসেন এবং নির্বাহী প্রকৌশলী জনাব মোহাম্মদ মোসলেহউদ্দীন চৌধুরী-কে অত্র ক্ষতিপূরণ দন্ড প্রদানের দায় হতে অব্যাহতি দেয়া হলো। অর্থাৎ সড়ক উন্নয়নের সাথে সরাসরি সংশ্লিষ্টতা গণ্যে আরোপিত ২৫% ক্ষতিপূরণ প্রদানের দায় অশোকা বিল্ডকন লিমিটেড এর উপর বর্তাবে। সাধারণত জাতীয় স্বার্থে সড়ক উন্নয়ন করা হয়ে থাকে। অর্থাৎ জাতীয় স্বার্থের বিষয় বিবেচনায় নিয়ে পরিবেশ সংরক্ষণ আইন, ১৯৯৫ অনুসরণ করে সরকারের অনুমোদন গ্রহণ আবশ্যক। পরিবেশ সংরক্ষণ বিধিমালা, ২০২৩ অনুযায়ী প্রকল্পের ধরণ বিবেচনায় নিয়ে "প্রকল্প ছাড়পত্র" গ্রহণপূর্বক সড়ক উন্নয়ন কার্য বাস্তবায়ন আবশ্যক। পরিবেশ এবং প্রতিবেশগত ক্ষতিসাধন এড়িয়ে জাতীয় স্বার্থে সংশ্লিষ্ট সড়ক উন্নয়ন কাজ বাস্তবায়নের ক্ষেত্রে বিদ্যমান আইন ও বিধিমালা অনুসরণ করার পাশাপাশি মহাপরিচালক, পরিবেশ অধিদপ্তর-কে প্রকল্প বাস্তবায়নে সংশ্লিষ্ট অংশীজনের (ব্যক্তি/প্রতিষ্ঠান) সচেতনতা বৃদ্ধির লক্ষ্যে প্রয়োজনীয় প্রশিক্ষণ আয়োজনের ব্যবস্থা নিতে বলা হোক।

এছাড়া, পরিবেশ ও প্রতিবেশ সংরক্ষণ, প্রকল্প বাস্তবায়নের পূর্বে ছাড়পত্র গ্রহণের বাধ্যবাধকতা ইত্যাদি বিষয়ে সড়ক ও জনপথ অধিদপ্তরের মাঠ পর্যায়ে প্রকল্প বাস্তবায়নের সাথে সংশ্লিষ্ট কর্মকর্তাদের প্রশিক্ষণ প্রদানের জন্য প্রধান প্রকৌশলী, সড়ক ও জনপথ অধিদপ্তর-কে কার্যকর ব্যবস্থা গ্রহণের জন্য বলা হলো। আদেশের কপি সচিব, সড়ক পরিবহন ও মহাসড়ক বিভাগ, মহাপরিচালক, পরিবেশ অধিদপ্তর ও প্রধান প্রকৌশলী, সড়ক ও জনপথ অধিদপ্তরসহ সংশ্লিষ্টদের দেয়া হোক।

স্বাক্ষরিত/-
(সিদ্ধার্থ শংকর কুন্ডু)
উপসচিব (পরিবেশ দূষণ নিয়ন্ত্রণ)
পরিবেশ, বন ও জলবায়ু পরিবর্তন মন্ত্রণালয়
এবং
সদস্য সচিব, আপিল কর্তৃপক্ষ

স্বাক্ষরিত/-
(মোহাম্মদ রেজাউল করিম)
যুগ্মসচিব (পরিবেশ-২)
পরিবেশ, বন ও জলবায়ু পরিবর্তন মন্ত্রণালয়
এবং
সদস্য, আপিল কর্তৃপক্ষ

স্বাক্ষরিত/-
(মোহাম্মদ আসাদুজ্জামান নূর)
যুগ্মসচিব
লেজিসলেটিভ ও সংসদ বিষয়ক বিভাগ
আইন, বিচার ও সংসদ বিষয়ক মন্ত্রণালয়
এবং
সদস্য, আপিল কর্তৃপক্ষ

স্বাক্ষরিত/-
(ড. নুরুন নাহার)
অতিরিক্ত সচিব (পরিবেশ দূষণ নিয়ন্ত্রণ) (প্রতিকম)
পরিবেশ, বন ও জলবায়ু পরিবর্তন মন্ত্রণালয়
এবং
সদস্য, আপিল কর্তৃপক্ষ

স্বাক্ষরিত/-
(মো: রায়হান কাওছার)
সচিব
পরিবেশ, বন ও জলবায়ু পরিবর্তন মন্ত্রণালয়
এবং
চেয়ারম্যান, আপিল কর্তৃপক্ষ

Annec-13: Assessment Report from DoF

শেখ হাসিনার নির্দেশ
জলবায়ু সহিষ্ণু বাংলাদেশ।

গণপ্রজাতন্ত্রী বাংলাদেশ সরকার
বন অধিদপ্তর
প্রধান বন সংরক্ষকের কার্যালয়
বন ভবন, আগারগাঁও, ঢাকা-১২০৭
(www.bforest.gov.bd)

স্মারক নং-২২.০১.০০০০.০১১.০৮.০৬৭.২০.২১৬

তারিখ- ০৮/০৫/২০২৩ খ্রিঃ।

বিষয়: বারৈয়ারহাট-হেয়াকো-রামগড় সড়ক প্রশস্থ করণ শীর্ষক প্রকল্প (Loc-III) এর আওতায় বিদ্যমান বারৈয়ারহাট-হেয়াকো-রামগড় সড়কটি (আর-১৫১ ও ১৫২) প্রশস্থ করণের লক্ষ্যে চট্টগ্রাম জেলার মীরসরাই ও ফটিকছড়ি উপজেলাধীন রামগড় সীতাকুন্ড রিজার্ভ ফরেস্ট মৌজার বাংলাদেশ সরকারের পক্ষে চট্টগ্রাম উত্তর বন বিভাগের মালিকাধীন বি.এস-১ নং খতিয়ানভুক্ত ৯০.৫৩৫৩ একর ভূমি সড়ক ও জনপথ অধিদপ্তর চট্টগ্রাম এর অনুকূলে হস্তান্তর/ব্যবহারকরণ প্রসংগে।

সূত্রঃ- (ক) মন্ত্রণালয়ের স্মারক নং-২২.০০.০০০০.০৬৬.৭৪.০৪৬.১৫.৩৩৫ তাং-০৮/১১/২০২২ খ্রিঃ।
(খ) বন সংরক্ষক, চট্টগ্রাম অঞ্চলের স্মারক নং-২২.০১.০০০০.৭০১.৪২.০৪৫.২৩.৮২৩ তারিখ ০৬/০৪/২০২৩ খ্রিঃ।
(গ) বিভাগীয় বন কর্মকর্তা, চট্টগ্রাম উত্তর বন বিভাগের স্মারক নং-২২.০১.০০০০.৭০৭.৪২.০১.২৩.১০৯৭ তারিখ ২৯/০৩/২০২৩ খ্রিঃ।

উপর্যুক্ত বিষয়ে ও সূত্রোক্ত স্মারকের প্রেক্ষিতে মতামতসহ প্রতিবেদন দাখিলের জন্য অনুরোধ জানানো হলে, বিভাগীয় বন কর্মকর্তা, চট্টগ্রাম উত্তর বন বিভাগ কর্তৃক গ সূত্রোক্ত স্মারকমূলে দাখিলকৃত প্রতিবেদন খ সূত্রোক্ত স্মারকমূলে বন সংরক্ষক, চট্টগ্রাম অঞ্চল বরাবর প্রেরণ করেছেন। প্রেরিত প্রতিবেদনে উল্লেখ করা হয়েছে যে, বিভাগীয় বন কর্মকর্তা, চট্টগ্রাম উত্তর বন বিভাগ বারৈয়ারহাট-হেয়াকো-রামগড় সড়ক প্রশস্থকরণ শীর্ষক প্রকল্প (Loc-III) এর আওতায় বিদ্যমান বারৈয়ারহাট-হেয়াকো-রামগড় সড়কটি (আর-১৫১ ও ১৫২) প্রশস্থকরণের লক্ষ্যে চট্টগ্রাম জেলার মীরসরাই ও ফটিকছড়ি উপজেলাধীন রামগড় সীতাকুন্ড রিজার্ভ ফরেস্ট মৌজার চট্টগ্রাম উত্তর বন বিভাগের মালিকাধীন বি.এস-১ নং খতিয়ানভুক্ত ৯০.৫৩৫৩ একর ভূমি সড়ক ও জনপথ অধিদপ্তর চট্টগ্রাম এর অনুকূলে হস্তান্তর/ব্যবহার এর জন্য অনুমতি প্রদান করা হলে উক্ত সংরক্ষিত বনভূমি হতে কী পরিমাণ গাছ আহরণ/অপসারণের প্রয়োজন হবে এবং আর্থিক ক্ষতি নিরূপণকল্পে সরেজমিনে পরিদর্শন পূর্বক বিস্তারিত প্রতিবেদন দাখিলের জন্য ০৪ সদস্য বিশিষ্ট কমিটি গঠন করা হয়। গঠিত কমিটি কর্তৃক সরেজমিনে পরিদর্শন করে দাখিলকৃত প্রতিবেদনে উল্লেখ করেছেন যে, চট্টগ্রাম উত্তর বন বিভাগের মালিকাধীন বি.এস-১ নং খতিয়ানভুক্ত ৯০.৫৩৫৩ একর সংরক্ষিত বনভূমি সড়ক ও জনপথ অধিদপ্তর চট্টগ্রাম এর অনুকূলে হস্তান্তর/ব্যবহারের অনুমতি প্রদান করা হলে চট্টগ্রাম উত্তর বন বিভাগের ফয়েরহাট রেঞ্জের ফয়েরহাট বিট-কাম চেক স্টেশন, হেয়াকো বিট, শ্রীধারমানিক বিট এবং নারায়ণহাট রেঞ্জের দাঁতমারা বিটের রামগড়-সীতাকুন্ড রিজার্ভ ফরেস্ট মৌজায় বর্তমানে বিদ্যমান রাস্তার উভয় পার্শ্বের প্রস্তাবিত প্রকল্পের এলাইনমেন্ট ম্যাপ অনুযায়ী পাহাড়, টিলা, ছড়া, নালা, জঙ্গল, সৃজিত বন বাগান, প্রাকৃতিক বন বাগান, ঝোপঝাড় সহ ইত্যাদি সকল প্রকার বনজ সম্পদ কর্তন, আহরণ এবং মাটি অপসারণ পূর্বক বনভূমি ব্যবহারের প্রয়োজন হবে।

বারৈয়ারহাট-হেয়াকো-রামগড় সড়ক প্রশস্থকরণ শীর্ষক প্রকল্প এর আওতায় চট্টগ্রাম উত্তর বন বিভাগের নিয়ন্ত্রনাধীন রামগড়-সীতাকুন্ড রিজার্ভ ফরেস্ট এর উপর দিয়ে রাস্তা প্রশস্থকরণের লক্ষ্যে ব্যবহৃতব্য সংরক্ষিত বনভূমিতে দৃশ্যমান গাছপালা/বনজদ্রব্যের মোট ক্ষয়ক্ষতির পরিমাণ নিম্নরূপ মর্মে প্রতিবেদনে উল্লেখ করা হয়েছে-

ক্রম নং	ক্ষয়ক্ষতির বিবরণ	পরিমাণ	একক মূল্য	টাকা	মন্তব্য
১	বনজদ্রব্যের ক্ষয়ক্ষতি (গাছের পরিমান)	২১,১৫১ টি		৭,১৮,৮৪,৪০০/-	
২	মাটি অপসারণজনিত ক্ষতি	১৮০০০ ঘ.মি (প্রায়)	৪০০/-	৭২,০০,০০০/-	
৩	করেরহাট বন পুন্ড ও পরীক্ষণ ফাঁড়িটি অপসারণ ও পুনর নির্মাণ প্রয়োজনহেতু ক্ষতি	১ টি	৯,০০,০০০/-	৯,০০,০০০/-	
৪	প্রাকৃতিক পরিবেশ, প্রতিবেশ, ইকো-সিস্টেম ও জীব বৈচিত্র্যের ক্ষয়ক্ষতিসহ পরিমাপযুক্ত এবং অন্যান্য গাছপালার Lifetime Productivity ক্ষয়ক্ষতির পরিমাণ (প্রায়)	৯০.৫৩৫৩ একর বনভূমির	২০,০০,০০০/-	১৮,১০,৭০,৬০০/-	
		সর্বমোট ক্ষয়ক্ষতির পরিমাণ-		২৬,১০,৫৫,০০০/- (ছাব্বিশ কোটি দশ লক্ষ পঞ্চান্ন হাজার) টাকা।	

উল্লেখ্য যে, ইতিপূর্বে পরিবেশ, বন ও জলবায়ু পরিবর্তন মন্ত্রণালয়ের স্মারক নং-২২.০০.০০০০.০৬৬.৭৪.০৪৬.১৫.১১৯ তাং-১৫/১২/২০২১ খ্রিঃ মূলে সড়ক পরিবহন ও সেতু মন্ত্রণালয় কর্তৃক বাস্তবায়িত ক্রস বর্ডার রোড নেটওয়ার্ক ইমপ্রুভমেন্ট প্রজেক্ট (বাংলাদেশ) এর আওতায় বারৈয়ারহাট-হেয়াকো-রামগড় আঞ্চলিক মহাসড়কে ৫টি লোকেশনে সেতু/কালভার্ট ও এপ্রোচ রোড নির্মাণের জন্য চট্টগ্রাম উত্তর বন বিভাগের সংরক্ষিত বনের ৭.৭৮৫ একর সংরক্ষিত ভূমি ব্যবহারের অনুমতি প্রদান করা হয়েছে। বর্তমানে বারৈয়ারহাট-হেয়াকো-রামগড় সড়ক প্রশস্তকরণ শীর্ষক প্রকল্প (Loc-111) এর আওতায় একই সড়ক অর্থাৎ বারৈয়ারহাট-হেয়াকো-রামগড় সড়কটি (আর-১৫১ ও ১৫২) প্রশস্তকরণের লক্ষ্যে চট্টগ্রাম জেলার মীরসরাই ও ফটিকছড়ি উপজেলাধীন রামগড় সীতাকুন্ড রিজার্ভ ফরেস্ট মৌজার চট্টগ্রাম উত্তর বন বিভাগের মালিকানাধীন বি.এস-১ নং খতিয়ানভুক্ত ৯০.৫৩৫৩ একর সংরক্ষিত বনভূমি সড়ক ও জনপথ অধিদপ্তর, চট্টগ্রাম এর অনুকূলে হস্তান্তর/ব্যবহারকরণ এর অনুমতি চাওয়া হয়েছে।

সংবিধানের ১৮ক অনুচ্ছেদে রাষ্ট্রীয় অঙ্গীকার হিসেবে "রাষ্ট্র বর্তমান ও ভবিষ্যৎ নাগরিকদের জন্য পরিবেশ সংরক্ষণ ও উন্নয়ন করিবেন এবং প্রাকৃতিক সম্পদ, জীব-বৈচিত্র্য, জলাভূমি, বন ও বন্যপ্রাণীর সংরক্ষণ ও নিরাপত্তা বিধান করিবেন" মর্মে উল্লেখ করা হয়েছে। জাতীয় বননীতি-১৯৯৪ এর ঘোষণাসমূহের ১৯ নং ক্রমিক অনুযায়ী "দেশে বনভূমির অগ্রতুলতার প্রেক্ষিতে সরকারের মালিকানাধীন সংরক্ষিত বনভূমি সরকার প্রধানের অনুমোদন ব্যতীত বনায়ন বহির্ভূত কাজে ব্যবহার করা যাবে না" মর্মে উল্লেখ আছে। জাতীয় ভূমি ব্যবহার নীতি, ২০০১ এর ১৭ অনুচ্ছেদে পরিবেশ, বন ও জলবায়ু পরিবর্তন মন্ত্রণালয় কর্তৃক ঘোষিত বনাঞ্চল বনভূমি হিসেবে চিহ্নিত থাকবে এবং বর্তমানে ব্যবহৃত বনভূমির সংরক্ষণ, রক্ষণাবেক্ষণ এবং সম্প্রসারণের উদ্যোগ গ্রহণ করতে হবে মর্মে নির্দেশনা রয়েছে। এছাড়া, অষ্টম পঞ্চবার্ষিক পরিকল্পনায় ব্যাপক বনায়ন ও প্রতিবেশ সংরক্ষণের মাধ্যমে জীববৈচিত্র্যের উন্নয়ন এবং বৃক্ষাচ্ছাদনের পরিমাণ দেশের মোট ভূমির ২৪% এ উন্নীত করার লক্ষ্যমাত্রা নির্ধারণ করা হয়েছে। এসডিজি'র লক্ষ্যমাত্রা অর্জন এবং অষ্টম পঞ্চবার্ষিক পরিকল্পনার লক্ষ্যমাত্রা যথাসময়ে পূরণের লক্ষ্যে বিদ্যমান সীমিত বনভূমি রক্ষা এবং বনভূমিতে বিরাজমান বনজসম্পদের সুষ্ঠু সংরক্ষণ অপরিহার্য। এছাড়াও, আমাদের মত ঘনবসতিপূর্ণ দেশে নতুন করে বনভূমির পরিমাণ বৃদ্ধির সুযোগও অত্যন্ত সীমিত।

২০২১ সালে নভেম্বর মাসে অনুষ্ঠিত UNFCCC এর COP-26 সম্মেলন এ "Glasgow Leader's Declaration on Forest and Land Use" ঘোষণার মাধ্যমে বিশ্বের ১৪১ টি দেশের সাথে বাংলাদেশও একাত্মতা ঘোষণা করে এবং ২০৩০ সাল নাগাদ বন উজাড় (Deforestation) বন্ধ করার জন্য সম্মিলিতভাবে কাজ করতে অঙ্গীকার করে। বনখাতে গ্রীন হাউস গ্যাস নির্গমন (Emission) কমানোর জন্য বাংলাদেশ Nationally Determined Contribution (NDC) এ লক্ষ্যমাত্রা নির্ধারণ পূর্বক UNFCCC তে দাখিল করেছে। এ লক্ষ্য অর্জনের জন্য বন অধিদপ্তর বন উজাড় রোধ, বনভূমি থেকে অবৈধদখল উচ্ছেদ, বন পুনরুদ্ধারসহ বনের আয়তন কমানো এবং বনায়ন কার্যক্রম পরিচালনা করছে।

সংবিধানের ১৮ক অনুচ্ছেদ এবং জাতীয় বননীতি, ১৯৯৪ ও জাতীয় ভূমি ব্যবহার নীতি, ২০০১ এর নির্দেশনা পরিপালন, এসডিজি'র লক্ষ্য পূরণ, COP-26 ও অষ্টম পঞ্চবার্ষিক পরিকল্পনার লক্ষ্যমাত্রা অর্জন এবং বন, বন্যপ্রাণী, জীব-বৈচিত্র্য সংরক্ষণের বৃহত্তর স্বার্থে বন আইন ১৯২৭ এর ২০ ধারায় ঘোষিত সংরক্ষিত বনভূমি কোন প্রতিষ্ঠানের অনুকূলে বনায়ন ব্যতীত অন্য কাজে ব্যবহারের জন্য হস্তান্তরের কোন সুযোগ নেই। এছাড়া প্রতিরক্ষা মন্ত্রণালয়ের অনুকূলে বনভূমি অধিগ্রহণের একটি প্রস্তাবের প্রেক্ষিতে মাননীয় প্রতিরক্ষা সচিব (মাননীয় প্রধানমন্ত্রী) "সংরক্ষিত বনভূমি অধিগ্রহণ করা যাবে না" মর্মে অনুশাসন প্রদান করেছেন।

এমতাবস্থায়, উপরে বর্ণিত বিষয়াদি বিবেচনা পূর্বক চট্টগ্রাম উত্তর বন বিভাগের অধিক্ষেত্রাধীন বারৈয়ারহাট-হেয়াকো-রামগড় সড়ক প্রশস্তকরণ শীর্ষক প্রকল্প (Loc-111) এর আওতায় বিদ্যমান বারৈয়ারহাট-হেয়াকো-রামগড় সড়কটি (আর-১৫১ ও ১৫২) প্রশস্তকরণের লক্ষ্যে চট্টগ্রাম জেলার মীরসরাই ও ফটিকছড়ি উপজেলাধীন চট্টগ্রাম উত্তর বন বিভাগের নিয়ন্ত্রনাধীন রামগড় সীতাকুন্ড রিজার্ভ ফরেস্ট মৌজার ৯০.৫৩৫৩ একর সংরক্ষিত বনভূমি সড়ক ও জনপথ অধিদপ্তর, চট্টগ্রাম এর অনুকূলে হস্তান্তর/ব্যবহারের অনুমতি প্রদানের সুযোগ নেই।

বিষয়টি মন্ত্রণালয়ের সদয় অবগতির জন্য জানানো হলো।

(মোঃ আমীর হোসাইন চৌধুরী)
প্রধান বন সংরক্ষক (চলতি দায়িত্ব)
বন অধিদপ্তর, বাংলাদেশ
ফোনঃ ০২৪৪০০৭১৪২
[E-mail: ccf-fd@bforest.gov.bd]

সচিব
পরিবেশ, বন ও জলবায়ু পরিবর্তন মন্ত্রণালয়
বাংলাদেশ সচিবালয়, ঢাকা।

অনুলিপিঃ জ্ঞাতার্থে ও কার্যার্থে

১। বন সংরক্ষক, চট্টগ্রাম অঞ্চল, চট্টগ্রাম। এ প্রসঙ্গে তার পত্রের খ সূত্রোক্ত স্মারক উল্লেখ্য।
২। বিভাগীয় বন কর্মকর্তা, চট্টগ্রাম উত্তর বন বিভাগ, চট্টগ্রাম। এ প্রসঙ্গে তার দপ্তরের গ সূত্রোক্ত স্মারক উল্লেখ্য।

Annex-14: Land use Permission from Forest Department

গণপ্রজাতন্ত্রী বাংলাদেশ সরকার
বিভাগীয় বন কর্মকর্তার কার্যালয়
চট্টগ্রাম উত্তর বন বিভাগ
বন পাহাড়, নন্দনকানন, চট্টগ্রাম-৪০০০
www.forestnorth.chittagong.gov.bd

স্মারক নং- ২২.০১.০০০০.৭০৭.৪২.০০১.২৬. ১২৯১ তারিখ: ০৬ জুন ২০২৬।

বিষয় ঃ চট্টগ্রাম সড়ক সার্কেলাধীন চট্টগ্রাম সড়ক বিভাগের "বারৈয়ারহাট-হেয়াকো-রামগড় সড়ক প্রশস্থকরণ (১ম সংশোধিত)" শীর্ষক প্রকল্পের আওতায় বিদ্যমান বারৈয়ারহাট-হেয়াকো-রামগড় সড়ক (আর-১৫১ ও আর-১৫২) প্রশস্থকরণের লক্ষ্যে চট্টগ্রাম জেলার মীরসরাই ও ফটিকছড়ি উপজেলাধীন রামগড়-সীতাকুন্ড রিজার্ভ ফরেস্ট মৌজার চট্টগ্রাম উত্তর বন বিভাগের মালিকাধীন বি.এস ১ নম্বর খতিয়ানভূক্ত ৯০.৫৩৫৩ একর সংরক্ষিত বনভূমির মালিকানা বন বিভাগের নিকট বহাল রেখে সড়ক ও জনপথ অধিদপ্তর, চট্টগ্রামের অনুকূলে ব্যবহার প্রসংগে।

সূত্র ঃ প্রকল্প পরিচালক ও তত্ত্বাবধায়ক প্রকৌশলী, সওজ, চট্টগ্রাম সড়ক সার্কেল, চট্টগ্রামের স্মারক নং-৩৫.০১.১৫৪১.১৭৩.৮৩.০১১.২৬-১৩০৩ তারিখ-২৪/০৬/২০২৬ খ্রিঃ

উপর্যুক্ত বিষয়ে সূত্র স্মারকের প্রেক্ষিতে সম্মানের সাথে জানানো যাচ্ছে যে, বিদ্যমান বারৈয়ারহাট-হেয়াকো-রামগড় সড়কটি (আর-১৫১ ও আর-১৫২) প্রশস্থকরণের লক্ষ্যে চট্টগ্রাম জেলার মীরসরাই ও ফটিকছড়ি উপজেলাধীন "রামগড়-সীতাকুন্ড রিজার্ভ ফরেস্ট মৌজার" বাংলাদেশ সরকার পক্ষে বন বিভাগের নামে বি.এস-১ নম্বর খতিয়ানে রেকর্ডভূক্ত এবং বন বিভাগের মালিকাধীন ৯০.৫৩৫৩ একর সংরক্ষিত বনভূমির মালিকানা বন বিভাগের নিকট বহাল রেখে কতিপয় শর্তাবলী প্রতিপালন সাপেক্ষে সড়ক ও জনপথ অধিদপ্তর, চট্টগ্রামের অনুকূলে সড়ক প্রশস্থকরণের কাজে ব্যবহারের জন্য অনুমতি প্রদান করা হয়। সওজ, চট্টগ্রাম কর্তৃক ভূমি ব্যবহারের নিমিত্ত বনজদ্রব্য, জীব-বৈচিত্র্য ও অন্যান্য ক্ষতিপূরণ বাবদ নির্ধারিত অর্থ ২৬,১০,৫৫,০০০/- (ছাব্বিশ কোটি দশ লক্ষ পঞ্চান্ন হাজার) টাকা মাত্র ইতোমধ্যে পরিশোধ করা হয়েছে।

সূত্র স্মারকে বাৎসরিক Fixed Demands রাজস্ব পরিশোধের নিমিত্ত সংশ্লিষ্ট C.F. No.1 Form স্বাক্ষর পূর্বক পূরণের নিমিত্ত প্রেরণ করা হয়। Forest Manual Part-II, Chapter-IV, Article-54A এর বিধান অনুসারে বাৎসরিক Fixed Demands রাজস্ব পরিশোধ সাপেক্ষে সংশ্লিষ্ট C.F. No.1 Form পূরণ পূর্বক স্বাক্ষরান্তে ০৪ (চার) প্রস্থ এতদসঙ্গে প্রেরণ করা হলো। বনভূমির মালিকানা বন বিভাগের অনুকূলে বহাল রেখে সড়ক ও জনপথ বিভাগের (সওজ) ব্যবহারের নিমিত্ত ফিক্সড ডিমান্ড রাজস্ব হিসাবে প্রতি বছর একর প্রতি ১০,০০০/- (দশ হাজার) টাকা রাজস্ব সড়ক ও জনপথ (সওজ) কর্তৃপক্ষ বন বিভাগকে প্রদান করতে হবে এবং প্রতি ৫ (পাঁচ) বছর অন্তর ২৫% হারে রাজস্ব বৃদ্ধি করতে হবে মর্মে শর্ত আরোপ করা আছে বিধায় ২০২৬-২০২৭ আর্থিক সালের Fixed Demands রাজস্ব বাবদ (৯০.৫৩৫৩ একর X ১০,০০০/-)= ৯,০৫,৩৫৩/- (নয় লক্ষ পাঁচ হাজার তিন শত তিপ্পান্ন) টাকা মাত্র পরিশোধ সাপেক্ষে সংযুক্ত চুক্তিপত্র কার্যকর হবে।

বর্ণিতাবস্থায়, ২০২৬-২০২৭ আর্থিক সালের Fixed Demands রাজস্ব বাবদ ৯,০৫,৩৫৩/- (নয় লক্ষ পাঁচ হাজার তিন শত তিপ্পান্ন) টাকা মাত্র পরিশোধের প্রয়োজনীয় ব্যবস্থা গ্রহণসহ সংযুক্ত C.F. No.1 Form স্বাক্ষরান্তে ০২ (দুই) প্রস্থ ফেরৎ প্রেরণের জন্য বিশেষভাবে অনুরোধ করা হলো।

সংযুক্ত ঃ C.F. No.1 Form ০৪ প্রস্থ। তাং ১০/৬/২৬
১২৮৮ তাং ১০/৬/২৬

বিতরণ ঃ প্রকল্প পরিচালক ও
তত্ত্বাবধায়ক প্রকৌশলী
সওজ, চট্টগ্রাম সড়ক সার্কেল
রহমতগঞ্জ, চট্টগ্রাম।

মো: সফিকুল ইসলাম
বিভাগীয় বন কর্মকর্তা
চট্টগ্রাম উত্তর বন বিভাগ
ই-মেইলঃ dfoctgnorth@gmail.com
ফোন-০২৩৩৩৩৬৪৩৯৯

উপ-বিভাগীয় প্রকৌশলী (গওজ)
সীতাকুন্ড সড়ক উপ বিভাগ

অনুলিপি সদয় জ্ঞাতার্থে প্রেরণ করা হলো ঃ

০১। প্রধান বন সংরক্ষক, বন অধিদপ্তর (দৃষ্টি আকর্ষণ ঃ সহকারী প্রধান বন সংরক্ষক, ব্যবস্থাপনা পরিকল্পনা ইউনিট), বন ভবন, আগারগাঁও, শেরেবাংলানগর, ঢাকা-১২০৭।
০২। বন সংরক্ষক, চট্টগ্রাম অঞ্চল, চট্টগ্রাম।
০৩। প্রকল্প ব্যবস্থাপক ও নির্বাহী প্রকৌশলী, সওজ, চট্টগ্রাম সড়ক বিভাগ, রহমতগঞ্জ, চট্টগ্রাম।
০৪। সহকারী বন সংরক্ষক, করেরহাট/নারায়নহাট, চট্টগ্রাম উত্তর বন বিভাগ।
০৫। রেঞ্জ কর্মকর্তা, করেরহাট/নারায়নহাট রেঞ্জ, চট্টগ্রাম উত্তর বন বিভাগ।

Land-Baraiyerhat-Ramgarh-Fixed Demands

সড়ক বিভাগ, চট্টগ্রাম।
গ্রহন নং ২১২০ তাং ২৭/৬/২৬
স্মারক নং ২৮৩৮ তাং ২৭/৬/২৬
১) বিঃ প্রঃ চট্টসদর/সীতাকুন্ড/ফটিকছড়ি/যান্ত্রিক
২) সহঃ প্রকৌঃ / বিঃ হিঃর/ প্রঃ সহঃ/প্রাক্কলনিক
৩) সার্ভেয়ার
৪) প্রয়োজনীয় ব্যবস্থা নিন।
৫) মতামতসহ প্রতিবেদন দিন।

নিঃ/প্রঃ/সড়ক বিভাগ, চট্টগ্রাম।